Maintenance Manual MM-0368

RideStar™ RIS13EF and RIS16EF Series Independent Front Suspension (IFS) Systems

Issued 06-05

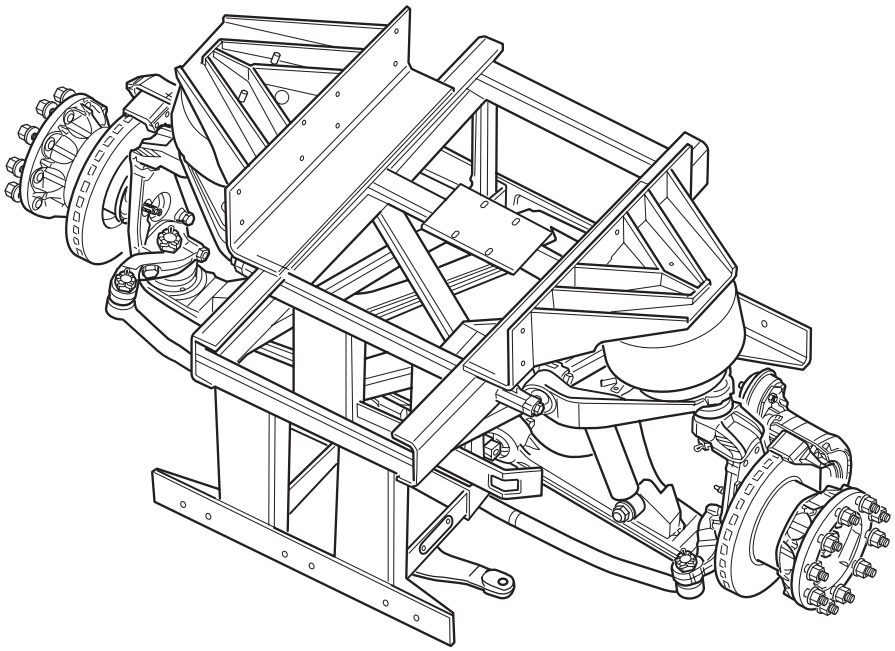

About This Manual

This manual provides maintenance and service information for the Meritor RideStar™ RIS13EF and RIS16EF Series Independent Front Suspension (IFS) systems.

Before You Begin

1. Read and understand all instructions and procedures before you begin to service components.
2. Read and observe all Warning and Caution hazard alert messages in this publication. They provide information that can help prevent serious personal injury, damage to components, or both.
3. Follow your company's maintenance and service, installation, and diagnostics guidelines.
4. Use special tools when required to help avoid serious personal injury and damage to components.

Hazard Alert Messages and Torque Symbols

⚠ WARNING

A Warning alerts you to an instruction or procedure that you must follow exactly to avoid serious personal injury and damage to components.

⚠ CAUTION

A Caution alerts you to an instruction or procedure that you must follow exactly to avoid damage to components.

This symbol alerts you to tighten fasteners to a specified torque value.

How to Obtain Additional Maintenance and Service Information

On the Web

Visit the DriveTrain Plus™ by Meritor Tech Library at meritor.com to easily access product and service information. The Library also offers an interactive and printable Literature Order Form.

Meritor's Customer Service Center

Call Meritor's Customer Service Center at 800-535-5560.

Technical Electronic Library on CD

The DriveTrain Plus™ by Meritor Technical Electronic Library on CD contains product and service information for most Meritor and Meritor WABCO products. Specify TP-9853.

How to Obtain Tools and Supplies Specified in This Manual

Call Meritor's Commercial Vehicle Aftermarket at 888-725-9355 to obtain Meritor tools and supplies.

Information contained in this publication was in effect at the time the publication was approved for printing and is subject to change without notice or liability. Meritor Heavy Vehicle Systems, LLC, reserves the right to revise the information presented or to discontinue the production of parts described at any time.

Contents

pg. i **Asbestos and Non-Asbestos Fibers**

1 **Section 1: Exploded Views**

4 **Section 2: Introduction**
Description
Model Nomenclature
Model Numbers and Designations

6 **Section 3: Suspension Ride Height, Travel and Tire Clearance**
Suspension Ride Height
How to Determine the Correct Ride Height
Suspension Travel
Jounce and Rebound

7 **Section 4: Inspection**
Intervals
8 Shock Absorbers
9 Upper and Lower Control Arm Ball Joints and Bar Pin Bushings
10 Air Springs
11 Brakes
Steering Assembly
13 Unitized Wheel Ends

17 **Section 5: Removal and Disassembly**
Removal
Wheel
Caliper Assembly
Wheel Adapter and Rotor
18 Unitized Wheel End
Air Spring
Shock Absorber
Steering Arm and Knuckle
19 Upper and Lower Control Arm
20 Disassembly
Upper and Lower Control Arms
21 Removal
Steering Assembly
22 Disassembly
Idler Arm and Relay Arm

23 **Section 6: Prepare Parts for Assembly**
Clean, Dry and Inspect Parts
Ground or Polished Parts
Rough Parts
Dry Cleaned Parts
Prevent Corrosion on Cleaned Parts
Inspection
Steering Arm and Knuckle
24 Tie Rod Grease Fittings

pg. 25 **Section 7: Assembly and Installation**
Assembly
Upper and Lower Control Arms
26 Installation
Upper and Lower Control Arm
27 Steering Arm and Knuckle
28 Unitized Wheel End
29 Wheel Adapter and Rotor
Caliper Assembly
30 Air Spring
Shock Absorber
31 Assembly
Idler Arm and Relay Arm
32 Installation
Steering Assembly

35 **Section 8: Adjustment**
Adjustment
Inspection Before Alignment
Maximum Turn Angle
36 Adjust the Pressure Relief in the Power Steering System, Set the Maximum Turn Angle
37 Turning Radius Angle
Measure and Adjust the Toe

39 **Section 9: Specifications**

40 **Section 10: Special Tools**
Tool Drawings

⚠ ASBESTOS FIBERS WARNING

The following procedures for servicing brakes are recommended to reduce exposure to asbestos fiber dust, a cancer and lung disease hazard. Material Safety Data Sheets are available from Meritor.

Hazard Summary

Because some brake linings contain asbestos, workers who service brakes must understand the potential hazards of asbestos and precautions for reducing risks. Exposure to airborne asbestos dust can cause serious and possibly fatal diseases, including asbestosis (a chronic lung disease) and cancer, principally lung cancer and mesothelioma (a cancer of the lining of the chest or abdominal cavities). Some studies show that the risk of lung cancer among persons who smoke and who are exposed to asbestos is much greater than the risk for non-smokers. Symptoms of these diseases may not become apparent for 15, 20 or more years after the first exposure to asbestos.

Accordingly, workers must use caution to avoid creating and breathing dust when servicing brakes. Specific recommended work practices for reducing exposure to asbestos dust follow. Consult your employer for more details.

Recommended Work Practices

1. Separate Work Areas. Whenever feasible, service brakes in a separate area away from other operations to reduce risks to unprotected persons. OSHA has set a maximum allowable level of exposure for asbestos of 0.1 f/cc as an 8-hour time-weighted average and 1.0 f/cc averaged over a 30-minute period. Scientists disagree, however, to what extent adherence to the maximum allowable exposure levels will eliminate the risk of disease that can result from inhaling asbestos dust. OSHA requires that the following sign be posted at the entrance to areas where exposures exceed either of the maximum allowable levels:

DANGER: ASBESTOS
CANCER AND LUNG DISEASE HAZARD
AUTHORIZED PERSONNEL ONLY
RESPIRATORS AND PROTECTIVE CLOTHING
ARE REQUIRED IN THIS AREA.

2. Respiratory Protection. Wear a respirator equipped with a high-efficiency (HEPA) filter approved by NIOSH or MSHA for use with asbestos at all times when servicing brakes, beginning with the removal of the wheels.

3. Procedures for Servicing Brakes.

a. Enclose the brake assembly within a negative pressure enclosure. The enclosure should be equipped with a HEPA vacuum and worker arm sleeves. With the enclosure in place, use the HEPA vacuum to loosen and vacuum residue from the brake parts.

b. As an alternative procedure, use a catch basin with water and a biodegradable, non-phosphate, water-based detergent to wash the brake drum or rotor and other brake parts. The solution should be applied with low pressure to prevent dust from becoming airborne. Allow the solution to flow between the brake drum and the brake support or the brake rotor and caliper. The wheel hub and brake assembly components should be thoroughly wetted to suppress dust before the brake shoes or brake pads are removed. Wipe the brake parts clean with a cloth.

c. If an enclosed vacuum system or brake washing equipment is not available, employers may adopt their own written procedures for servicing brakes, provided that the exposure levels associated with the employer's procedures do not exceed the levels associated with the enclosed vacuum system or brake washing equipment. Consult OSHA regulations for more details.

d. Wear a respirator equipped with a HEPA filter approved by NIOSH or MSHA for use with asbestos when grinding or machining brake linings. In addition, do such work in an area with a local exhaust ventilation system equipped with a HEPA filter.

e. **NEVER** use compressed air by itself, dry brushing, or a vacuum not equipped with a HEPA filter when cleaning brake parts or assemblies. **NEVER** use carcinogenic solvents, flammable solvents, or solvents that can damage brake components as wetting agents.

4. Cleaning Work Areas. Clean work areas with a vacuum equipped with a HEPA filter or by wet wiping. **NEVER** use compressed air or dry sweeping to clean work areas. When you empty vacuum cleaners and handle used rags, wear a respirator equipped with a HEPA filter approved by NIOSH or MSHA for use with asbestos. When you replace a HEPA filter, wet the filter with a fine mist of water and dispose of the used filter with care.

5. Worker Clean-Up**.** After servicing brakes, wash your hands before you eat, drink or smoke. Shower after work. Do not wear work clothes home. Use a vacuum equipped with a HEPA filter to vacuum work clothes after they are worn. Launder them separately. Do not shake or use compressed air to remove dust from work clothes.

6. Waste Disposal. Dispose of discarded linings, used rags, cloths and HEPA filters with care, such as in sealed plastic bags. Consult applicable EPA, state and local regulations on waste disposal.

Regulatory Guidance

References to OSHA, NIOSH, MSHA, and EPA, which are regulatory agencies in the United States, are made to provide further guidance to employers and workers employed within the United States. Employers and workers employed outside of the United States should consult the regulations that apply to them for further guidance.

⚠ NON-ASBESTOS FIBERS WARNING

The following procedures for servicing brakes are recommended to reduce exposure to non-asbestos fiber dust, a cancer and lung disease hazard. Material Safety Data Sheets are available from Meritor.

Hazard Summary

Most recently manufactured brake linings do not contain asbestos fibers. These brake linings may contain one or more of a variety of ingredients, including glass fibers, mineral wool, aramid fibers, ceramic fibers and silica that can present health risks if inhaled. Scientists disagree on the extent of the risks from exposure to these substances. Nonetheless, exposure to silica dust can cause silicosis, a non-cancerous lung disease. Silicosis gradually reduces lung capacity and efficiency and can result in serious breathing difficulty. Some scientists believe other types of non-asbestos fibers, when inhaled, can cause similar diseases of the lung. In addition, silica dust and ceramic fiber dust are known to the State of California to cause lung cancer. U.S. and international agencies have also determined that dust from mineral wool, ceramic fibers and silica are potential causes of cancer.

Accordingly, workers must use caution to avoid creating and breathing dust when servicing brakes. Specific recommended work practices for reducing exposure to non-asbestos dust follow. Consult your employer for more details.

Recommended Work Practices

1. Separate Work Areas. Whenever feasible, service brakes in a separate area away from other operations to reduce risks to unprotected persons.

2. Respiratory Protection. OSHA has set a maximum allowable level of exposure for silica of 0.1 mg/m^3 as an 8-hour time-weighted average. Some manufacturers of non-asbestos brake linings recommend that exposures to other ingredients found in non-asbestos brake linings be kept below 1.0 f/cc as an 8-hour time-weighted average. Scientists disagree, however, to what extent adherence to these maximum allowable exposure levels will eliminate the risk of disease that can result from inhaling non-asbestos dust.

Therefore, wear respiratory protection at all times during brake servicing, beginning with the removal of the wheels. Wear a respirator equipped with a high-efficiency (HEPA) filter approved by NIOSH or MSHA, if the exposure levels may exceed OSHA or manufacturers' recommended maximum levels. Even when exposures are expected to be within the maximum allowable levels, wearing such a respirator at all times during brake servicing will help minimize exposure.

3. Procedures for Servicing Brakes.

a. Enclose the brake assembly within a negative pressure enclosure. The enclosure should be equipped with a HEPA vacuum and worker arm sleeves. With the enclosure in place, use the HEPA vacuum to loosen and vacuum residue from the brake parts.

b. As an alternative procedure, use a catch basin with water and a biodegradable, non-phosphate, water-based detergent to wash the brake drum or rotor and other brake parts. The solution should be applied with low pressure to prevent dust from becoming airborne. Allow the solution to flow between the brake drum and the brake support or the brake rotor and caliper. The wheel hub and brake assembly components should be thoroughly wetted to suppress dust before the brake shoes or brake pads are removed. Wipe the brake parts clean with a cloth.

c. If an enclosed vacuum system or brake washing equipment is not available, carefully clean the brake parts in the open air. Wet the parts with a solution applied with a pump-spray bottle that creates a fine mist. Use a solution containing water, and, if available, a biodegradable, non-phosphate, water-based detergent. The wheel hub and brake assembly components should be thoroughly wetted to suppress dust before the brake shoes or brake pads are removed. Wipe the brake parts clean with a cloth.

d. Wear a respirator equipped with a HEPA filter approved by NIOSH or MSHA when grinding or machining brake linings. In addition, do such work in an area with a local exhaust ventilation system equipped with a HEPA filter.

e. **NEVER** use compressed air by itself, dry brushing, or a vacuum not equipped with a HEPA filter when cleaning brake parts or assemblies. **NEVER** use carcinogenic solvents, flammable solvents, or solvents that can damage brake components as wetting agents.

4. Cleaning Work Areas. Clean work areas with a vacuum equipped with a HEPA filter or by wet wiping. **NEVER** use compressed air or dry sweeping to clean work areas. When you empty vacuum cleaners and handle used rags, wear a respirator equipped with a HEPA filter approved by NIOSH or MSHA, to minimize exposure. When you replace a HEPA filter, wet the filter with a fine mist of water and dispose of the used filter with care.

5. Worker Clean-Up. After servicing brakes, wash your hands before you eat, drink or smoke. Shower after work. Do not wear work clothes home. Use a vacuum equipped with a HEPA filter to vacuum work clothes after they are worn. Launder them separately. Do not shake or use compressed air to remove dust from work clothes.

6. Waste Disposal**.** Dispose of discarded linings, used rags, cloths and HEPA filters with care, such as in sealed plastic bags. Consult applicable EPA, state and local regulations on waste disposal.

Regulatory Guidance

References to OSHA, NIOSH, MSHA, and EPA, which are regulatory agencies in the United States, are made to provide further guidance to employers and workers employed within the United States. Employers and workers employed outside of the United States should consult the regulations that apply to them for further guidance.

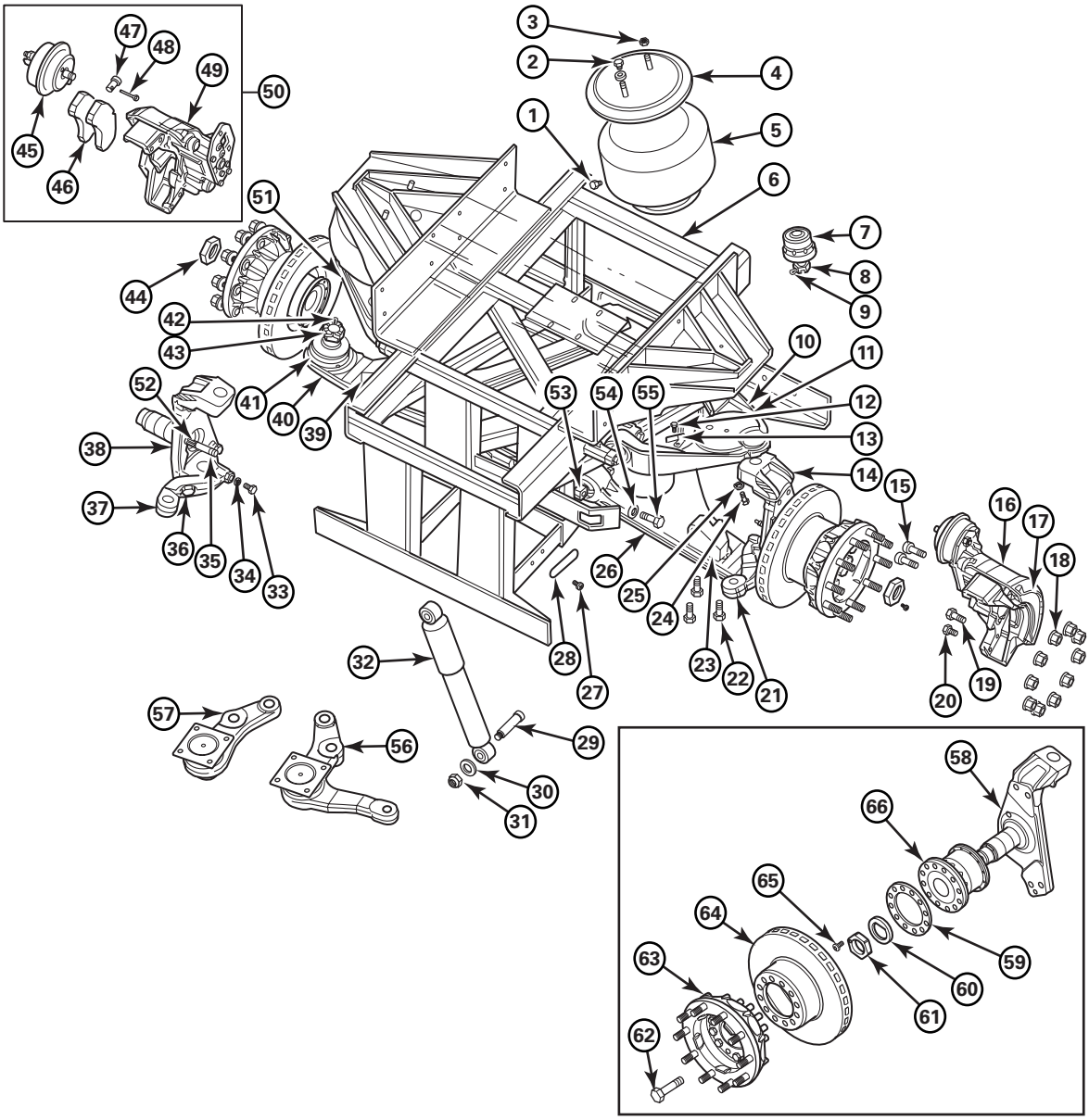
1
2
3
4
5
6
7
8
9
10
11
12
13
14
15
16
17
18
19
20
21
22
23
24
25
26
27
28
29
30
31
32
33
34
35
36
37
38
39
40
41
42
43
44
45
46
47
48
49
50
51
52
53
54
55
56
57
58
59
60
61
62
63
64
65
66

4005290a

Item	Description
1	M16 x 1.5 to 3/8-18 NPTF Adapter
2	M16 x 1.5 Plug
3	M12 x 1.75 Locknut
4	Air Spring Support Plate
5	Air Spring
6	Subframe Assembly
7	65 mm Ball Stud Assembly
8	M36 x 1.5 Castle Nut
9	Cotter Pin
10	Suspension Assembly
11	Left-Hand Upper Control Arm
12	M8 x 1.25 x 16 Capscrew
13	Level Sensor Bracket
14	Left-Hand Steering Knuckle Assembly
15	M20 x 1.5 x 60 Socket Head Capscrew
16	Left-Hand Disc Brake Assembly
17	Left-Hand Disc Brake
18	M22 x 1.5 Nut Assembly
19	M20 x 1.5 x 60 Capscrew
20	M20 x 1.5 x 45 Capscrew
21	Left-Hand Steering Arm
22	M16 x 2 x 60 Socket Head Capscrew
23	Left-Hand Shock Absorber Bracket
24	M14 x 2 x 40 Capscrew
25	M14 Lock Washer
26	Left-Hand Lower Control Arm
27	Pop Rivet
28	Name Plate
29	0.75-10 Shoulder Bolt
30	Flat Washer
31	3/4-10 Locknut
32	Shock Absorber
33	M14 x 1.5 Steering Stop Screw
34	M14 Jam Nut
35	ABS Sensor

Item	Description
36	M20 x 1.5 x 70 Capscrew
37	Right-Hand Steering Arm
38	Right-Hand Steering Knuckle
39	Right Hand Shock Absorber Bracket
40	Right-Hand Lower Control Arm
41	80 mm Ball Stud Assembly
42	Cotter Pin
43	M42 x 1.5 Castle Nut
44	Right-Hand M55 x 2 Spindle Nut, Left-Hand Thread
45	Brake Chamber Assembly
46	Brake Shoe and Lining Assembly
47	Clevis Pin
48	Cotter Pin
49	Right-Hand Disc Brake
50	Right-Hand Disc Brake Assembly
51	Right-Hand Upper Control Arm
52	Sensor Bushing
53	Bushing Assembly
54	Washer
55	Capscrew
56	Steering Relay Arm
57	Steering Idler Arm
58	Knuckle
59	Spacer
60	Washer
61	Left-Hand M55 x 2 Spindle Nut, Right-Hand Thread
62	M18 x 1.5 x 80 Capscrew
63	Wheel Adapter Assembly
64	Rotor
65	M8 x 1.25 x 20 Socket Head Capscrew
66	Unitized Wheel-End Assembly

1 Exploded Views

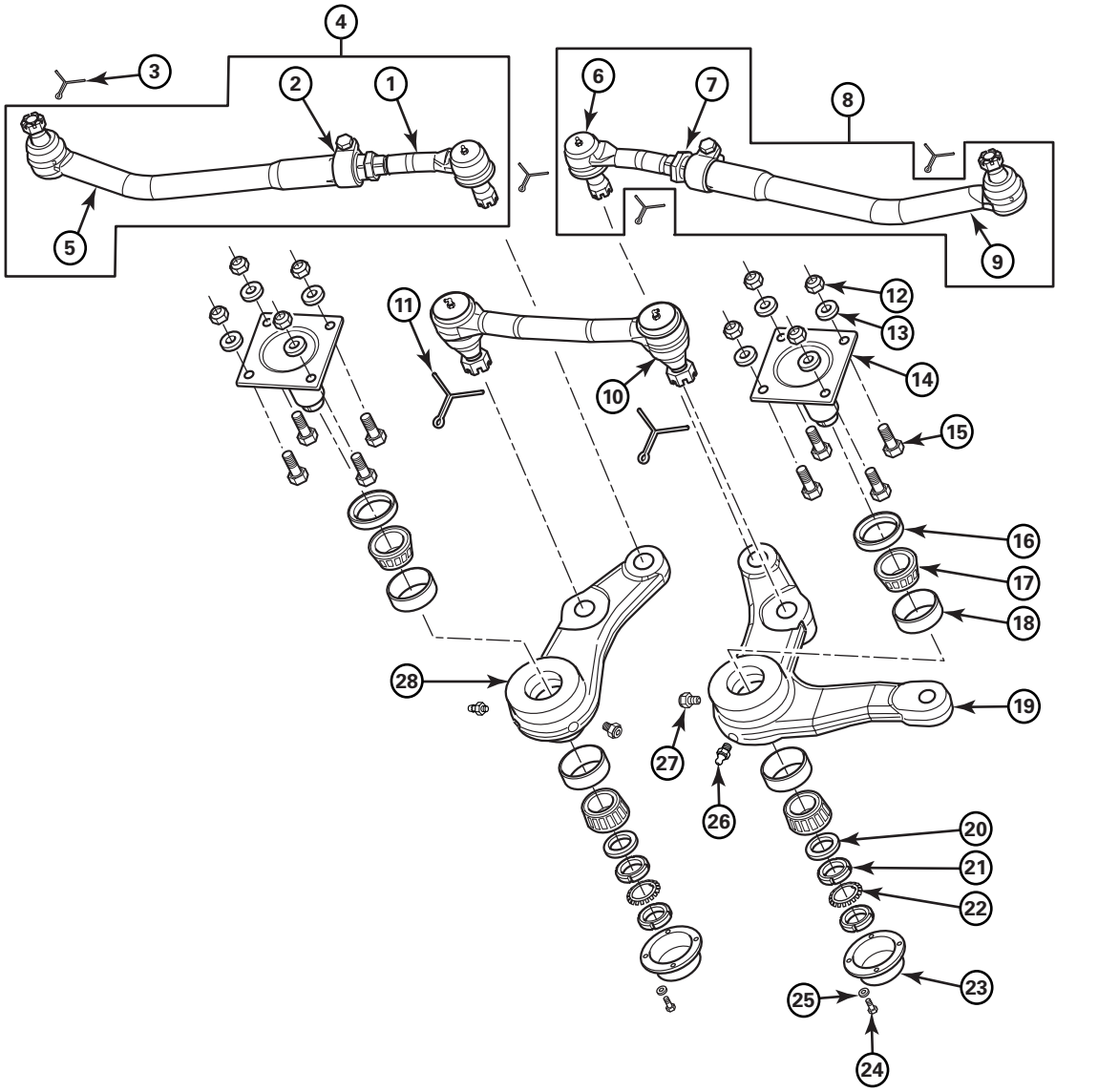

4005253a

Item	Description
1	Right-Hand Tie Rod End
2	Clamp Nut
3	1/8 x 2.0 Cotter Pin
4	Right-Hand Tie Rod Assembly
5	Right-Hand Tie Rod
6	Left-Hand Tie Rod End
7	Slotted Sleeve
8	Left-Hand Tie Rod Assembly
9	Left-Hand Tie Rod
10	Relay Rod Assembly
11	3/16 x 2.5 Cotter Pin
12	Locknut
13	Washer
14	Pivot Shaft
15	5/8″-11 Capscrew
16	Grease Seal
17	Bearing Cone
18	Bearing Cup
19	Steering Relay Arm
20	Washer
21	Locknut
22	Washer
23	Cover
24	Capscrew
25	Washer
26	Grease Fitting
27	Relief Fitting
28	Steering Idler Arm

Description

The RideStar™ RIS13EF and RIS16EF Series Independent Front Suspension (IFS) systems are up to 16,000-lb capacity independent front suspension systems which include a short arm/long arm independent suspension, air springs, Gabriel shock absorbers, steering linkage and a subframe. Suspension travel is 3.5-inches (90 mm) of jounce travel and 3.5-inches (90 mm) of rebound travel.

For maintenance and service information about the other Meritor components, such as brakes, refer to the appropriate maintenance manual. To obtain these publications, refer to the Service Notes page on the front inside cover of this manual.

Model Nomenclature

Model Numbers and Designations

An identification tag is located on the lower left-hand side of the subframe. Figure 2.1. To obtain replacement parts, refer to the Service Notes page on the front inside cover of this manual and specify the complete model number on the tag. The model number on the identification tag provides the suspension designation. Figure 2.2.

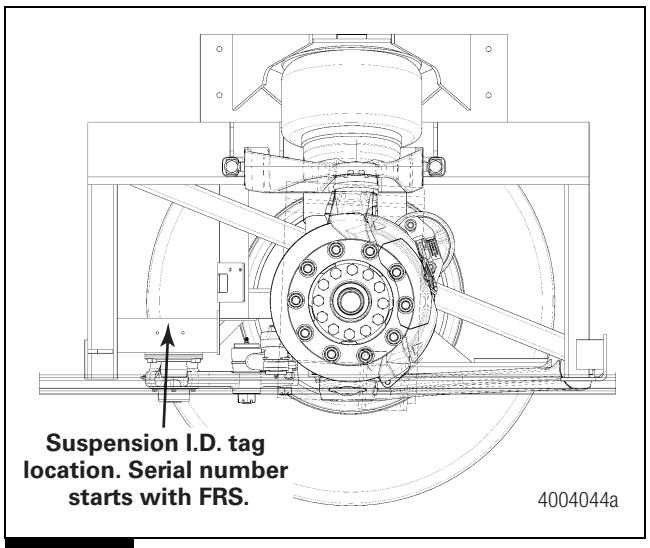

Figure 2.1

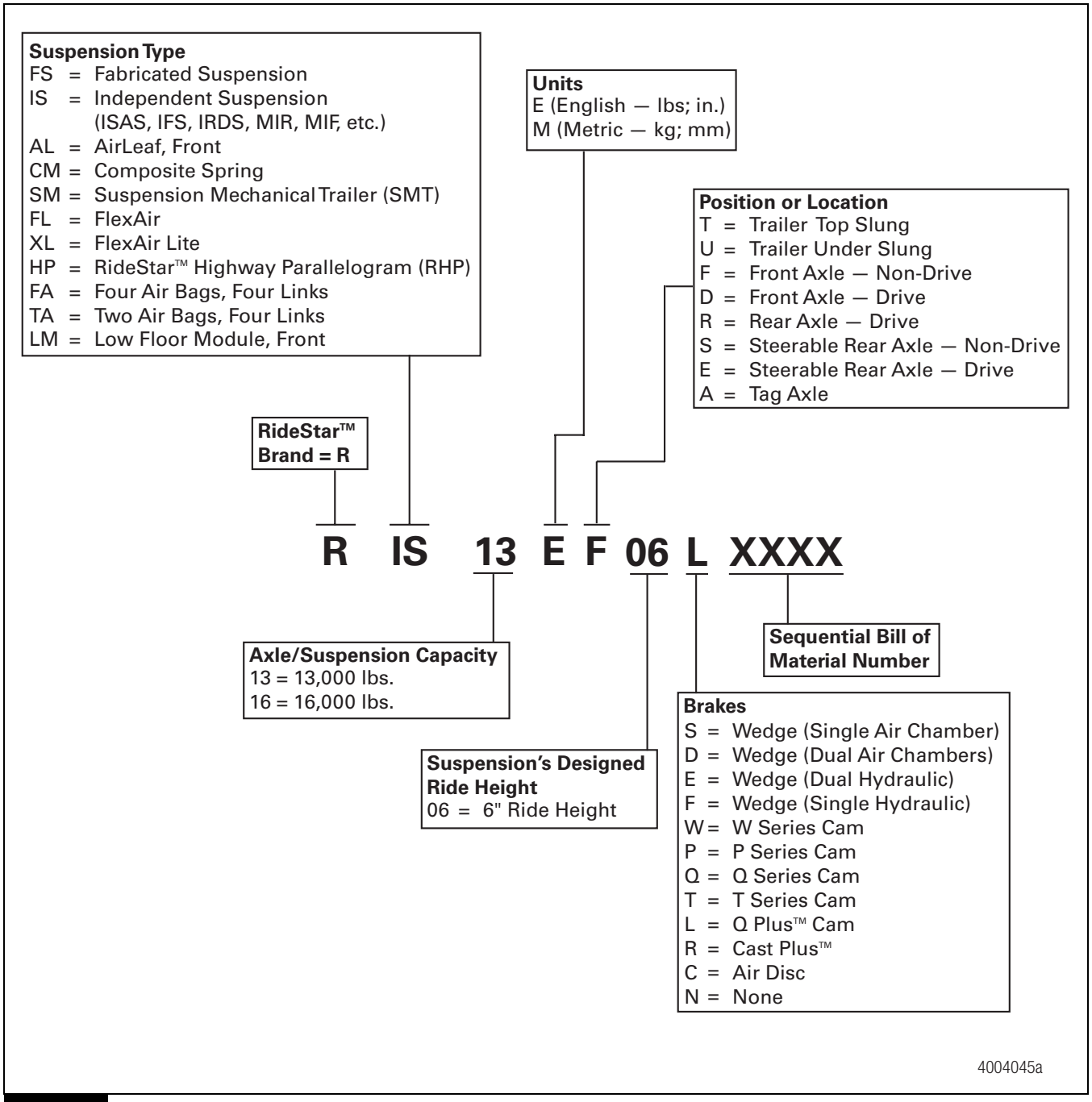
Suspension Type
FS = Fabricated Suspension
IS = Independent Suspension (ISAS, IFS, IRDS, MIR, MIF, etc.)
AL = AirLeaf, Front
CM = Composite Spring
SM = Suspension Mechanical Trailer (SMT)
FL = FlexAir
XL = FlexAir Lite
HP = RideStar™ Highway Parallelogram (RHP)
FA = Four Air Bags, Four Links
TA = Two Air Bags, Four Links
LM = Low Floor Module, Front
Units
E (English — lbs; in.)
M (Metric — kg; mm)
Position or Location
T = Trailer Top Slung
U = Trailer Under Slung
F = Front Axle — Non-Drive
D = Front Axle — Drive
R = Rear Axle — Drive
S = Steerable Rear Axle — Non-Drive
E = Steerable Rear Axle — Drive
A = Tag Axle
RideStar™ Brand = R
R IS 13 E F 06 L XXXX
Axle/Suspension Capacity
13 = 13,000 lbs.
16 = 16,000 lbs.
Suspension's Designed Ride Height
06 = 6" Ride Height
Sequential Bill of Material Number
Brakes
S = Wedge (Single Air Chamber)
D = Wedge (Dual Air Chambers)
E = Wedge (Dual Hydraulic)
F = Wedge (Single Hydraulic)
W = W Series Cam
P = P Series Cam
Q = Q Series Cam
T = T Series Cam
L = Q Plus™ Cam
R = Cast Plus™
C = Air Disc
N = None
4004045a

Figure 2.2

Suspension Ride Height

Suspension ride height is the distance from the centerline of the suspension to the underside of the vehicle frame. Figure 3.1.

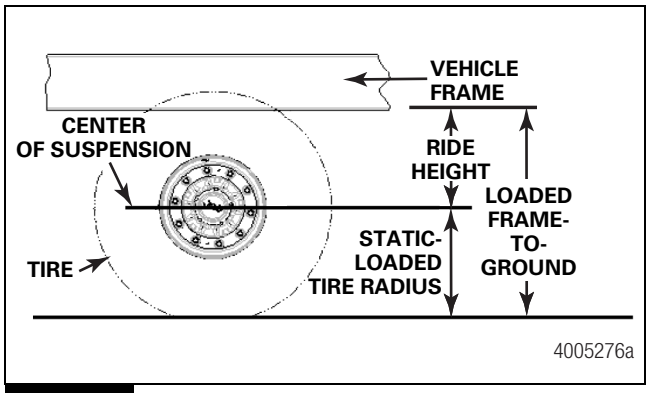

Figure 3.1

All Meritor air suspensions are designed to operate at a specific ride height, which must be maintained during the life of the suspension. Otherwise incorrect loading can occur, which can affect suspension performance, shorten component life and void the Meritor warranty.

Operating a vehicle with ride height higher than specified by the application can cause the vehicle to be over the legal height limit, depending on the type of vehicle and payload.

To obtain the correct ride-height specification, check the suspension's identification tag located on the lower left-hand side of the subframe.

How to Determine the Correct Ride Height

Consider the following factors when you determine the correct suspension ride height.

Vehicle Frame-to-Ground Distance

You must measure the distance from the bottom of the vehicle frame to the ground at each suspension location. Figure 3.2. This measurement determines the required vehicle height. Refer to the vehicle manufacturer's information for ride height specifications and adjustment procedures.

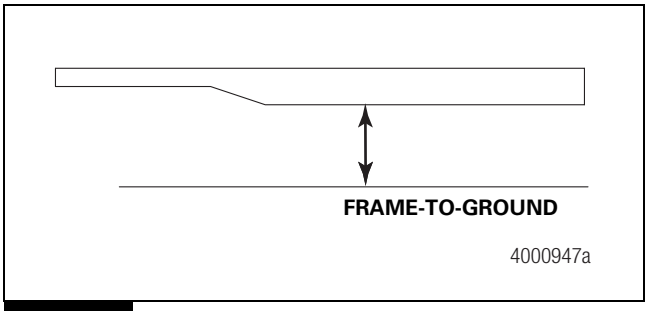

Figure 3.2

Suspension Ride Height Calculation

To calculate the required suspension ride height, subtract the tire's static-loaded radius from the loaded frame-to-ground dimension. Figure 3.1.

Suspension Travel

Jounce and Rebound

Jounce is the amount of upward suspension travel from the suspension's designed ride-height position. Figure 3.3. The suspension has 3.5-inches (90 mm) of jounce.

Rebound is the amount of downward suspension travel from the suspension's designed ride-height position. Figure 3.3. The suspension has 3.5-inches (90 mm) of rebound.

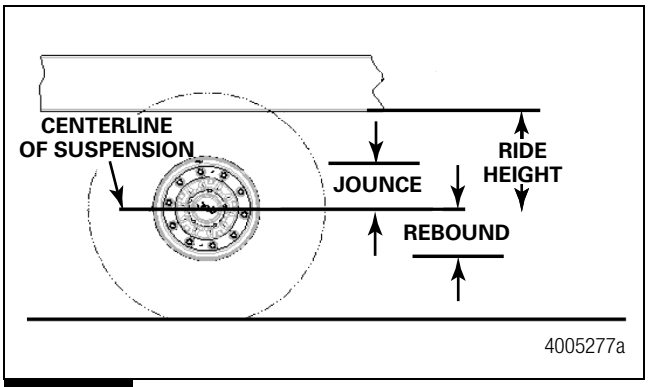

Figure 3.3

Hazard Alert Messages

Read and observe all Warning and Caution hazard alert messages in this publication. They provide information that can help prevent serious personal injury, damage to components, or both.

⚠ WARNING

To prevent serious eye injury, always wear safe eye protection when you perform vehicle maintenance or service.

Take care when you use Loctite® adhesive to avoid serious personal injury. Read the manufacturer's instructions before using this product. Follow the instructions carefully to prevent irritation to the eyes and skin.

Always deflate the air springs before you begin service procedures. Do not service the air suspension on a vehicle with the air springs inflated. Serious personal injury and damage to components can result.

Check fastener torque values, tighten loose fasteners and replace damaged fasteners. Loose, damaged or missing fasteners can cause loss of vehicle control, serious personal injury and damage to components.

Intervals

Inspect the suspension components annually or at regular intervals during normal operation.

Before each trip, visually inspect the suspension system and listen for air leaks.

Inspect the shock absorbers, air springs and bushings when the axle or brakes are inspected. Replace the components as necessary.

After 1,000 miles (1609 km) of service on a new vehicle and after component replacement, tighten all fasteners to the specified torque. Refer to Section 9 for torque specifications.

At each preventive maintenance inspection, or annually, visually inspect all fasteners for looseness or movement. Tighten loose fasteners to the specified torque. Refer to Section 9 for torque specifications.

If the fastener has Loctite® threadlocker and turns, remove the fastener and clean off the threads. Apply new Loctite® threadlocker and install the fastener according to the instructions in Section 7.

Replace damaged fasteners to maintain the specified torque and to comply with warranty requirements.

When replacing any suspension component, never reuse capscrews, washers or locknuts.

Table A

	Service Intervals			
Component	**20,000 Miles (32 200 km)**	**40,000 Miles (64 000 km)**	**80,000 Miles (128 747 km)**	**200,000 Miles (320 000 km)**
Control Arm Bar Pin-to-Subframe Mounting Capscrews				I
Steering Assembly-to-Frame Locknuts				I
Tie Rod Ends[1]	I	L[2]		
Tie Rod Assembly — Inspection for Movement	I			
Steering Arm Bolts				I
Steering Relay Assembly			L	
Steering Idler Assembly			L	
Sealed Hub Unit — Inspection	Refer to the unitized wheel-end inspection procedure for inspection intervals.			

[1] Tie rod ends with an anti-tilt style seal require lubrication every 10,000 miles (16 100 km).

[2] If power washers are used during vehicle cleaning operations, lubrication intervals need to be adjusted. Frequent power-washed vehicles will require more frequent lubrication.

I = Inspect

L = Lubricate

Shock Absorbers

The following conditions may indicate that the shock absorbers should be replaced. If any of these conditions exist, inspect the shock absorbers and repair or replace parts as necessary.

- Uneven tire wear, check balance before replacing the shock absorbers
- Poor ride quality
- Excess vibration
- Premature wear on electrical and cooling system components
- Damaged air springs
- Leaking shock absorber

Inspection

Inspect the shock absorbers for the following conditions. If any of these conditions exist, repair or replace parts as necessary. Figure 4.1.

- Damaged upper or lower mount
- Damaged upper or lower bushing
- Incorrect installation
- Damaged dust tube
- Bent or dented shock absorber body

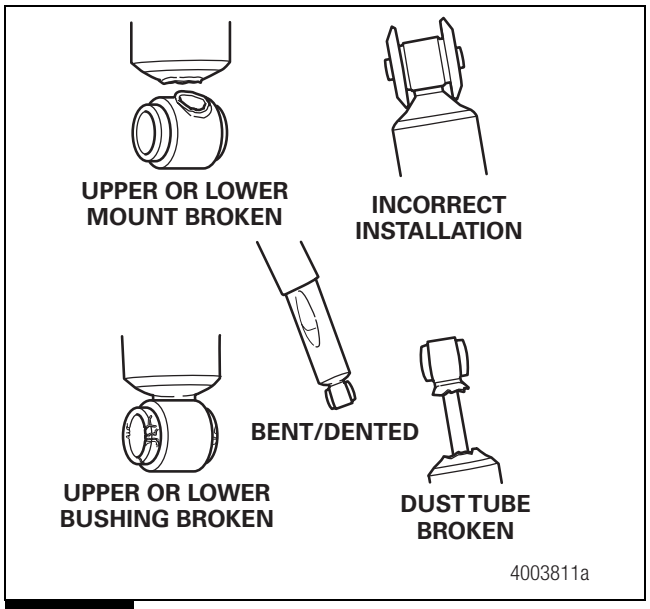

Figure 4.1

Leaking Shock Absorbers

Misting shock absorbers are often misdiagnosed as leaking shock absorbers. Misting is when very small amounts of shock absorber fluid evaporate at high operating temperatures through the shock absorber upper seal. When the mist reaches the cooler outside air, it condenses and forms a film on the outside of the shock absorber body. When mixed with road debris and dust, a grime will often coat the entire body of the shock absorber. Misting is a normal and necessary function of the shock absorber. The evaporating fluid lubricates the seal. A leaking shock absorber will have fluid leaking in streams from the upper seal. Inspect the shock absorbers for leaking when the shock absorber is fully extended. Figure 4.2.

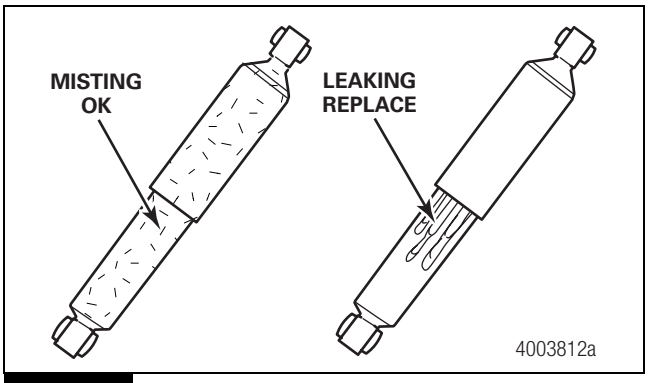

Figure 4.2

Heat Test

Shock absorbers operate at temperatures between ambient and 350°F (177°C). Shock absorbers should be slightly warm or hot after normal use. If poor ride quality exists and you suspect the shock absorber is not operating correctly, perform the following heat test.

1. Drive the vehicle at moderate speeds for at least 15 minutes.
2. Within a few minutes of driving the vehicle, touch the chassis near the shock absorber and then carefully touch each shock absorber body below the dust cover or tube. All shock absorbers should be warmer than the chassis.
   - **If a shock absorber is cooler than the chassis or the shock absorber on the other end of the suspension:** Remove the cooler shock absorber.
3. Shake the shock absorber to inspect it for internal damage. Listen for metal parts rattling inside the shock absorber. Loose metal parts inside the shock absorber can indicate internal damage.

Upper and Lower Control Arm Ball Joints and Bar Pin Bushings

Inspect the upper and lower control arm ball joints before you clean the suspension components. Grease or fluid on the ball joint boots may indicate a leak in the boots.

⚠ WARNING

Park the vehicle on a level surface. Block the wheels to prevent the vehicle from moving. Support the vehicle with safety stands. Do not work under a vehicle supported only by jacks. Jacks can slip and fall over. Serious personal injury and damage to components can result.

1. Park the vehicle on a level surface. Block the wheels to prevent the vehicle from moving.
2. Inspect the four ball joint boots for tears and damage. The boot retaining ring must be in place. Check for grease on the boot. Figure 4.3 and Figure 4.4.
   - **If a boot is damaged or the retaining ring is missing:** Replace the ball joint.

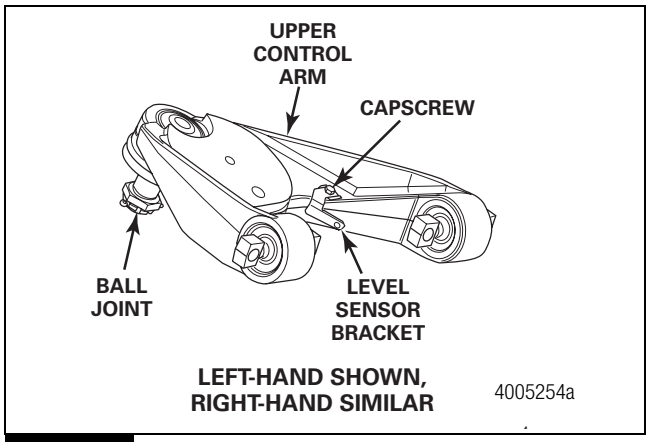

Figure 4.3

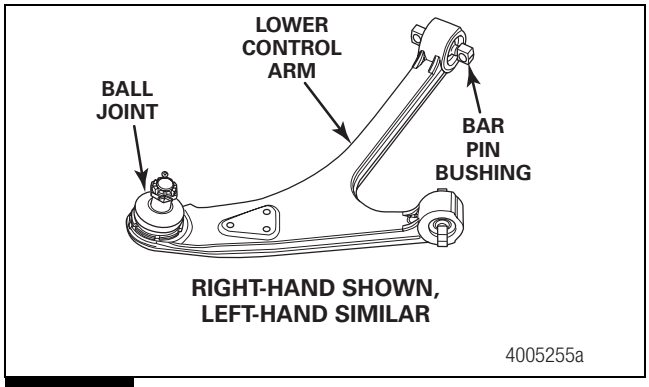

Figure 4.4

3. Inspect the eight bar pin bushings on the left-hand and right-hand upper and lower control arms for cracks in the rubber, wear and looseness. Replace damaged or worn bushings. Figure 4.3 and Figure 4.4.

   Use a two-foot (61 cm) pry bar to check the arm pivot bushings for looseness and wear. Replace the bushings if any free play is detected. Check each location in both axial and radial directions.

   Separation of the elastomer off the bar pin is permissible up to a third (1/3) of the circumference.

   Replacement is also necessary if the following wear characteristics are determined:

   A. Cracks or fracture of the metal parts of the bushing. Figure 4.5.

   B. Plastic deformation of the sheet-metal race

   C. Inadequate bolted connection, i.e., loosened, broken or lost bolt

   D. Damage to the snap ring, snap ring detached from the groove, broken or lost

   - **If damage to the inner housing contour or the snap ring groove is determined during replacement of the elastomeric bearing:** Replace the control arm.

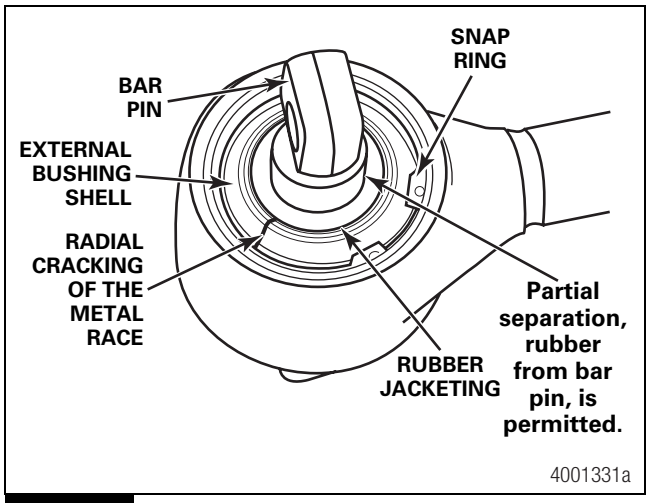

Figure 4.5

4. Check the upper and lower control arms for cracks and damage. Replace worn or damaged control arms.

5. Use the following procedure to check for ball joint wear.
   A. Using a suitable lift, raise the vehicle so that the front wheels are off the ground. Support the vehicle with safety stands.
   B. Using a dial indicator or suitable measuring instrument, measure the distance between the bottom of the lower control arm and the top of the 80 mm lower ball joint, Dimension A. Figure 4.6.

⚠ CAUTION

Use care when positioning and lifting the pry bar to avoid damaging the boot. Do not allow the bar to slip and cut or tear the boot. Damage to components can result.

   C. Using a pry bar between the knuckle and the lower control arm, lift the ball joint to the maximum limit within the socket. Repeat the measurement made in Step B.
      - **If the difference between the two measurements is greater than 0.079-inch (2 mm):** Replace the ball joint.
   D. Repeat Steps B and C for the 65 mm upper ball joint.
      - **If the difference between the two measurements is greater than 0.059-inch (1.5 mm):** Replace the ball joint.

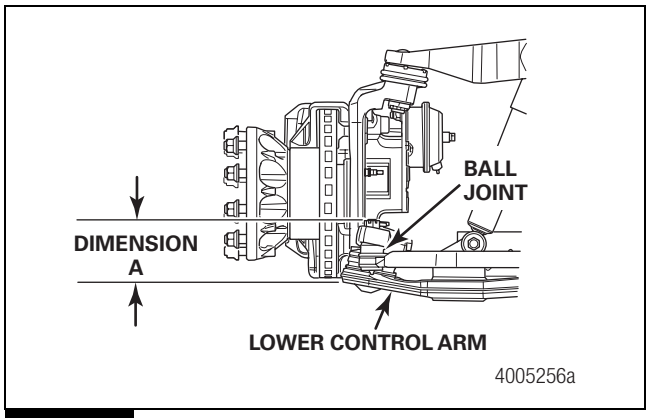

Figure 4.6

Air Springs

⚠ WARNING

Verify that all personnel are clear of the vehicle before you inflate or deflate the air springs. The air suspension system has various pinch points that can cause serious personal injury.

Only use soap and water, methyl alcohol, ethyl alcohol and isopropyl alcohol to clean air springs and air spring components. Do not use organic solvents, open flames, abrasives and direct pressurized steam. Serious personal injury and damage to components can result.

The following items should be inspected when the vehicle is in for periodic maintenance.

1. Always deflate the air springs before you begin service procedures. Do not service the air suspension on a vehicle with the air springs inflated.
2. Inspect the O.D. of the air spring. Check for signs of irregular wear or heat cracking.
3. Inspect the air lines to verify that contact doesn't exist between the air line and the O.D. of the air spring. Air lines can rub a hole in an air spring quickly.
4. Verify that there is sufficient clearance around the entire circumference of the air spring while at its maximum diameter.
5. Inspect the piston for foreign materials.
6. Correct ride height should be maintained. All vehicles with air springs have a specified ride height established by the vehicle manufacturer. This height should be maintained within 1/4-inch (6.35 mm). This dimension can be checked with the vehicle loaded or empty.
7. Leveling valves, or height control valves, ensure that the total air spring system works as required. Clean, inspect and replace, if necessary.
8. Verify that the correct shock absorbers are in place. Inspect the shock absorbers as described in this section. The shock absorber limits the rebound of an air spring and keeps it from overextending.
9. Check the tightness of all mounting hardware (nuts and bolts). If loose, tighten to specification. Do not over-tighten.

Brakes

Inspect the brake pads and rotors for wear. Repair or replace components as necessary. Refer to Technical Bulletin TP-02173, DiscPlus™ DX195 and DX225 Air Disc Brakes. To obtain this publication, refer to the Service Notes page on the front inside cover of this manual.

Steering Assembly

Inspect the tie rods, relay arm, relay rod and idler arm for wear, cracks and damage. Check that no axial or radial end play exists in the relay and idler arm assemblies. Grease the relay and idler arm assemblies per the intervals in Table A. Figure 4.7.

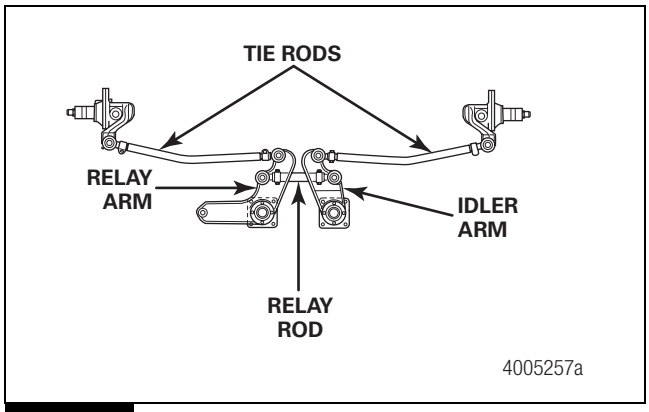

Figure 4.7

Tie Rod and Relay Rod Assemblies

Do not grease the tie rod and relay rod assemblies before you perform the inspection. You may not be able to detect loose or worn tie rod ends during operation. Under normal operating conditions, wear occurs over time. The preload bearings inside each tie rod end provide less resistance, which can affect steering control, front tire wear and other suspension components. Regularly-scheduled inspection and maintenance helps to minimize the effects of tie rod end wear on the vehicle. Refer to Table A for intervals. Figure 4.8.

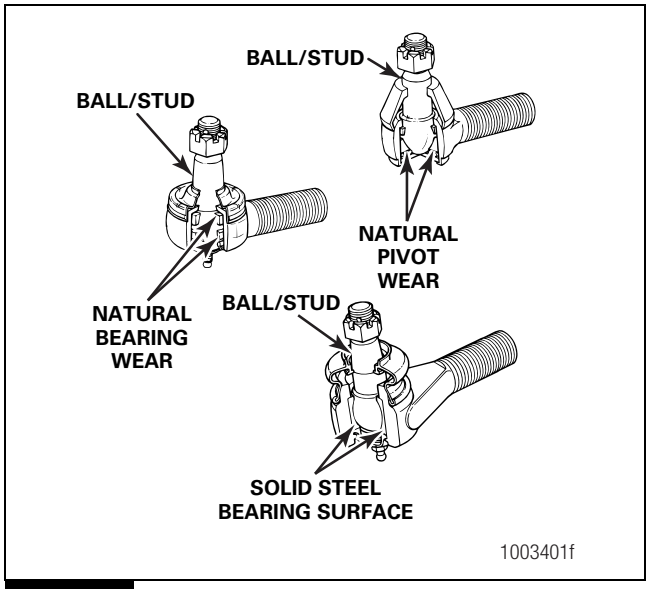

Figure 4.8

1. Park the vehicle on a level surface with the wheels STRAIGHT. Block the wheels to prevent the vehicle from moving. Set the parking brake.
2. Raise the vehicle so that the front wheels are off the ground. Support the vehicle with safety stands. Do not use a jack to support the vehicle.
3. With the engine off, turn the wheels from full left to full right. Return to the straight-ahead position. This step will require more force for vehicles with the power steering off.
4. Check the tie rod boot for cracks, tears or other damage. Also check the boot seals for damage. Replace the entire tie rod end if the boot is damaged or missing. Figure 4.9.

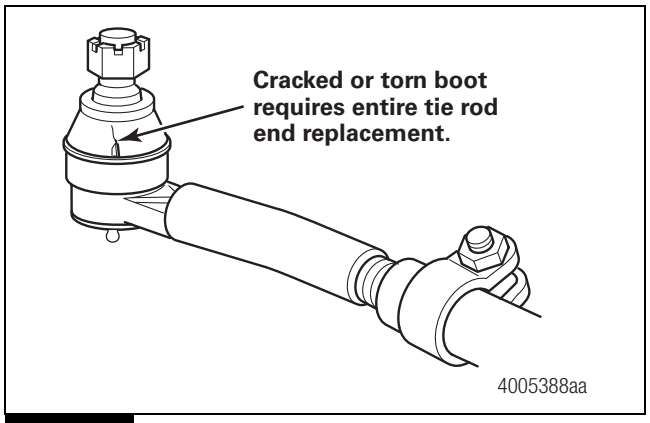

Figure 4.9

⚠ WARNING

Verify that a cotter pin is installed through the tie rod end, and the tie rod end nut is tightened to the correct torque specification. Replace a missing cotter pin and tighten a loose tie rod end nut. A missing cotter pin or loose tie rod end nut can cause loss of steering control. Serious personal injury and damage to components can result.

5. Check that the tie rod end nut is installed and secured with a cotter pin.
   - **If the cotter pin is missing:** Tighten the tie rod end nut to the correct torque specification. Continue tightening the nut to align the nut slot with the cotter pin hole. Do not back off the nut to obtain the alignment. Install a new cotter pin. Always tighten the tie rod end nut to the specified torque when setting the cotter pin.
6. Verify that the tie rods are the correct length and are within 1/8-inch (3 mm) of each other. The tie rod ends and slotted adjusting sleeve must have the correct engagement with the tie rod. Adjust the tie rod length and tie rod end engagement as necessary. Figure 4.10.
   - **To adjust the length:** Loosen the clamp nut and rotate the slotted sleeve until the appropriate length is achieved. Tighten the clamp nut to 130-150 lb-ft (176-203 N•m).

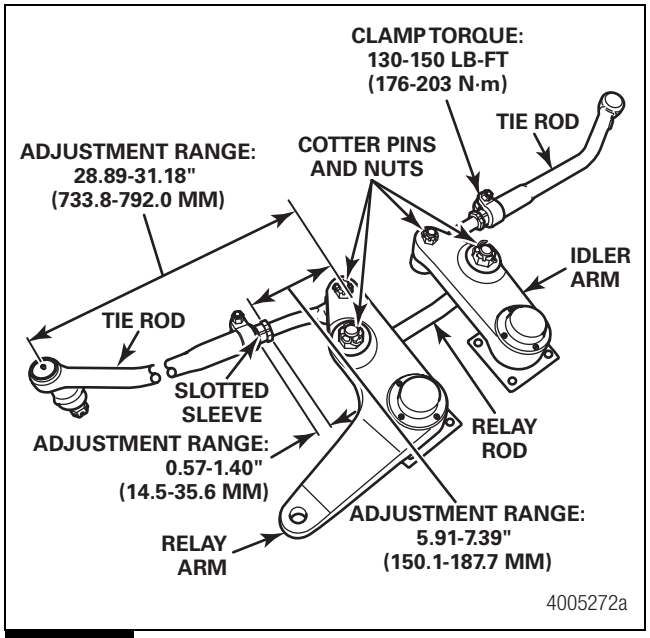

Figure 4.10

7. Check that the grease fittings are installed. Replace damaged grease fittings.
   - **If the tie rod ends are non-greaseable:** Do not install a grease fitting. Figure 4.11.

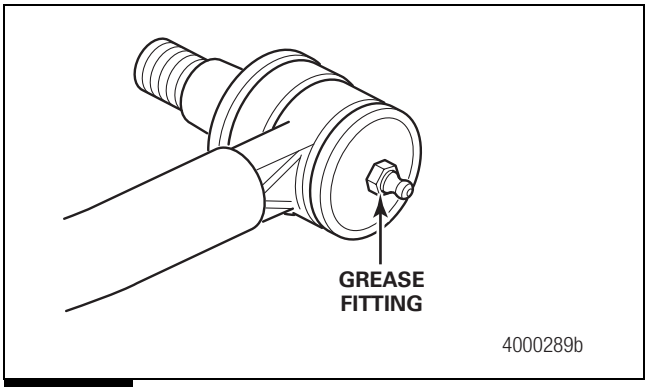

Figure 4.11

8. Position yourself directly below the ball stud socket. Using both hands, grasp the assembly end as close to the socket as possible, no more than six-inches (152.4 mm) from the end.

⚠ CAUTION

Only use your hands to check for movement or looseness of the tie rod assembly. Do not use a crow bar, pickle fork or two-by-four. Do not apply pressure or force to tie rod assembly ends or joints. Do not rock the tires with the vehicle on the ground or with the wheels raised. Damage to components can result.

9. Apply hand pressure of approximately 100 pounds in a vertical PUSH and PULL motion several times. Check for any movement or looseness at both tie rod ends.
   - **If there is any movement in the tie rod assembly:** Replace the tie rod assembly.

⚠ CAUTION

Replace damaged tie rods with original equipment parts. Do not attempt to straighten a bent tie rod. Damage to components can result.

10. Inspect the relay rod, tie rods and clamps for damage. Figure 4.12.
    - **If a tie rod or relay rod is damaged:** Replace it. Use original equipment parts of the same length, diameter and threads.
    - **If the clamps are damaged:** Replace the tie rod.

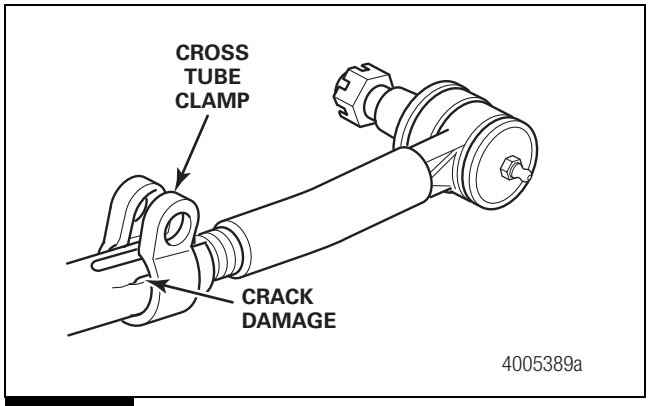

Figure 4.12

11. **Relay Rod Only**

    By hand or using a pipe wrench with jaw protectors to avoid gouging the relay rod, rotate the relay rod toward the FRONT of the vehicle and then toward the REAR. After rotating, center the relay rod between the stop positions.
    - **If the relay rod will not rotate in either direction:** Replace the relay rod.

Department of Transportation Roadside Tie Rod Assembly Replacement Criteria

When the roadside check indicates tie rod end movement of 1/8-inch (3 mm) or more, immediately remove the vehicle from service to replace the tie rod. Figure 4.12.

- **If the roadside check is less than 1/8-inch (3 mm) tie rod end movement:** The vehicle does not need to be immediately removed from a service run. Schedule a major out-of-service inspection and maintenance as soon as possible.

Unitized Wheel Ends

⚠ WARNING

You must follow the unitized wheel-end maintenance and inspection procedures provided in this manual to prevent serious personal injury and damage to components.

Inspection Intervals

You must perform detailed and basic inspections at the following intervals.

Detailed Inspections

Refer to the detailed inspection in this section for procedures.

- After the initial 100,000 miles (160 900 km) of operation or one year, whichever comes first
- After every additional 100,000 miles (160 900 km) of operation or one year, whichever comes first
- At mileages greater than 800,000 miles (1 287 480 km), after every six months or 50,000 miles (80 467 km), whichever comes first

Basic Inspections

After the initial 100,000-mile (160 900 km) detailed inspection, perform a basic inspection at each scheduled preventive maintenance interval, not to exceed 50,000-mile (80 467 km) intervals or one year, whichever comes first.

If the Vehicle is Equipped with ABS

In addition to scheduled preventive maintenance, if driver reports indicate the ABS light has been coming ON, and ABS diagnostics indicate the sensor gap is out-of-adjustment, check for possible wheel-end looseness as the cause.

Tools Required

Basic Inspection

A jack, wheel blocks and safety stands

Detailed Inspection

A dial indicator and a torque wrench with 500 lb-ft (678 N•m) capacity

Procedures

The unitized wheel end is sealed and greased for life and does not require lubrication. If you disassemble, or attempt to repair or lubricate a unitized wheel-end assembly, you will void the Meritor warranty. The inspection procedures provided in this manual do not instruct you to disassemble the unitized wheel end.

- Unitized wheel ends are not adjustable.
- Do not attempt to set or adjust end play.

Basic Inspection

1. Park the vehicle on a level surface. Block the rear wheels to prevent the vehicle from moving.

⚠ WARNING

Release all air from the air suspension system before you raise the vehicle or remove any components. Pressurized air can cause serious personal injury.

Verify that all personnel are clear of the vehicle before you inflate or deflate the air springs. The air suspension system has various pinch points that can cause serious personal injury.

2. Raise the vehicle so that the front wheels are off the ground. Support the vehicle with safety stands. Do not use a jack to support the vehicle.
3. Visually inspect the unitized wheel end as you rotate the tire and unitized wheel-end assembly. Verify that it rotates smoothly and without noise.

   If a ticking sound is detected during rotation, this does not indicate a hub problem. It is a normal occurrence.

   While rotating the wheel, grasp the brake chamber and steering arm to feel for unitized wheel-end hub vibration.

   - **If the tire and unitized wheel-end assembly does not rotate smoothly, you hear noise such as wheel bearing grind, or feel wheel-end hub vibration during rotation:** Perform a detailed inspection. Refer to Detailed Inspection in this section.
   - **If the wheel end rotates smoothly:** Proceed to Step 4.
4. Grasp the tire and wheel-end assembly at the nine and three o'clock positions. Check for vertical and horizontal movement. With your hands, apply approximately 50 lb (23 kg) of force to the assembly. You should not feel or see any looseness or movement.

   - **If you feel or see any movement or looseness in the tire and wheel-end assembly:** Perform a detailed inspection to determine the cause of the movement, such as worn upper or lower ball joints; worn bar pin bushings; wheel-to-hub-mounting end play; unitized wheel-end hub end play; or a combination of them all. To determine unitized wheel-end hub end play, refer to Detailed Inspection in this section.

   If other suspension components, such as bar pin bushings or ball joints, require inspection or service, refer to the appropriate section of this manual.

Wheel-to-Hub Mounting

Before proceeding with the unitized wheel end inspection, first check the wheel-to-hub mounting.

1. Verify that the wheel is mounted correctly and all wheel-end fasteners and hardware are tightened to the correct specification.
2. Apply the service brake to lock the hub and spindle together. Grasp the tire and wheel-end assembly at the nine and three o'clock positions. Check for vertical and horizontal movement. With your hands, apply approximately 50 lb (23 kg) of force to the assembly. You should not feel or see any looseness or movement.

   - **If you detect movement or looseness:** The upper and lower ball joints and bar pin bushings should be inspected. Refer to the procedure in this section.
   - **If applying the service brake eliminates movement or looseness:** Proceed to Detailed Inspection to determine the unitized wheel-end hub end play.

Detailed Inspection

1. Park the vehicle on a level surface. Block the rear wheels to prevent the vehicle from moving.
2. Raise the vehicle so that the front wheels are off the ground. Support the vehicle with safety stands. Do not use a jack to support the vehicle.

3. Remove the wheel, wheel adapter, rotor and spacer. The outboard and inboard seals of the bearing may purge small amounts of grease that are visible during inspection. This is a normal occurrence. Attach the magnetic base of a dial indicator onto the end of the spindle. Touch the indicator stem against the unitized wheel end mounting face. Figure 4.13. and Figure 4.14.

   It is important to note that the outboard and inboard seals may purge small amounts of grease that are visible during inspection. This is a normal occurrence. Figure 4.15.

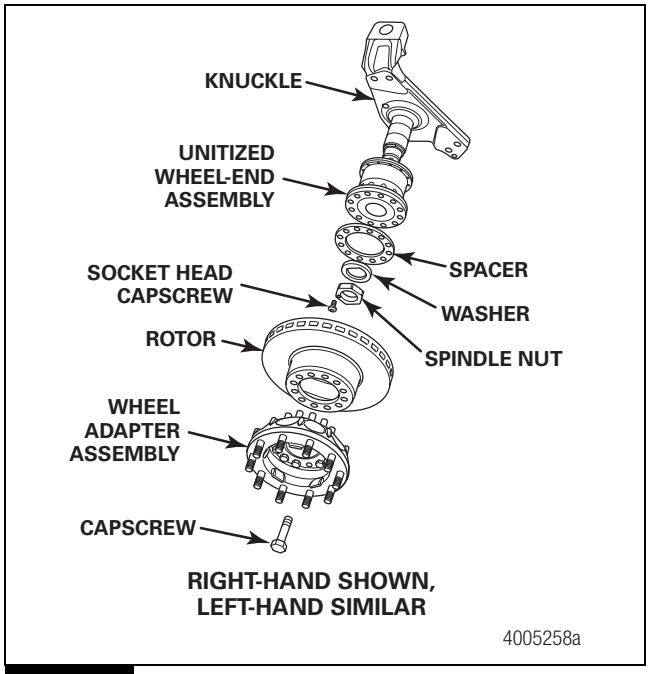

Figure 4.13

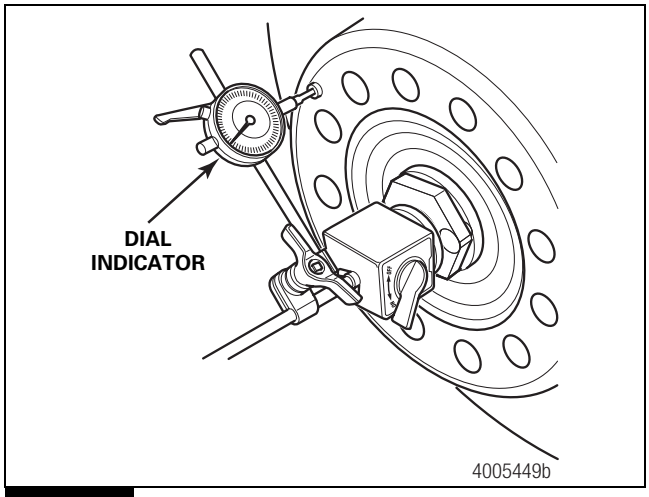

Figure 4.14

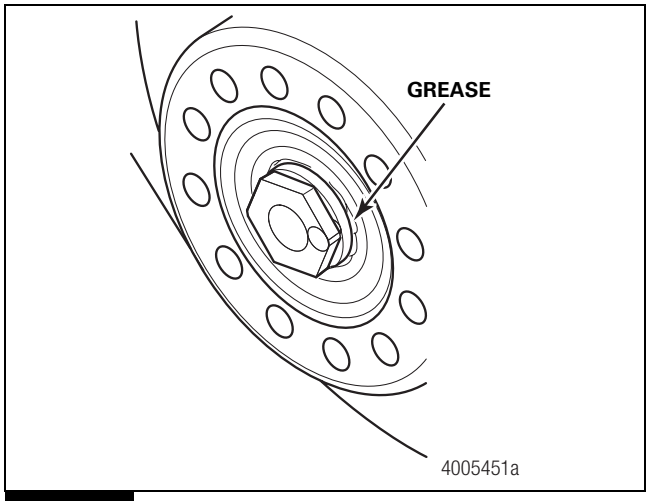

Figure 4.15

4. Set the dial indicator to ZERO. Do not rotate the wheel end. Place your hands at the nine and three o'clock positions.

5. Push the unitized wheel end straight IN. Note the reading. Pull the unitized wheel end straight OUT. Note the reading.

   - **If the total movement of the dial indicator is less than 0.003-inch (0.08 mm):** The inspection is complete. No adjustment is required.
   - **If the total movement of the dial indicator is greater than 0.003-inch (0.08 mm) but less than 0.006-inch (0.15 mm):** Record the measurement in a maintenance log, and perform a basic inspection at the next regularly-scheduled maintenance interval, or not to exceed 50,000 miles (80 467 km), whichever comes first.
   - **If the total movement of the dial indicator is 0.006-inch (0.15 mm) or greater:** Check the spindle nut torque. If the nut meets the torque specification, replace the unitized wheel end.

6. Verify that the unitized wheel end rotates smoothly and without noise.

   If a ticking sound is detected during rotation, this does not indicate a hub problem. It is a normal occurrence.

   While rotating the unitized wheel end, grasp the brake chamber and steering arm to feel for unitized wheel-end hub vibration.

   - **If the unitized wheel-end assembly does not rotate smoothly, you hear noise such as wheel bearing grind, or feel wheel-end hub vibration during rotation:** Replace the unitized wheel end. You must inspect a replacement hub before you install it. Refer to the replacement unitized wheel-end inspection information in this section.
   - **If the wheel end rotates smoothly:** The inspection is complete. Reinstall the wheel-end equipment. Return the vehicle to service.

Replacement Unitized Wheel-End Inspection

1. Remove the unitized wheel end from the box and place it onto a clean surface.
2. Examine the interior of the unitized wheel end to verify the following.
   A. The inner clip ring has not become dislodged in shipment and is in correct alignment with the inner and outer bearings. The gap between the inner and outer bearing sets and the clip ring must be equal. Figure 4.16.
   B. The gap between the ends of the clip ring must be equal and not exceed 0.25-inch (6 mm). If necessary, adjust by hand. Figure 4.16.
   C. The bearing face must be clean with no seal coating, dirt or dust.

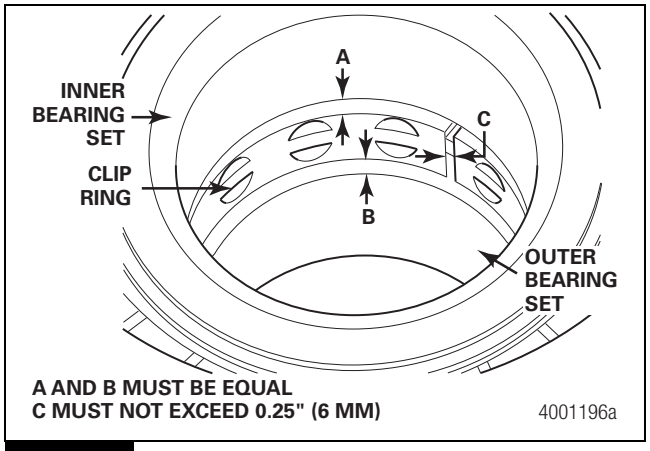

Figure 4.16

3. Examine the exterior of the unitized wheel end to verify the following.
   A. There is no visible damage to the inboard or outboard seals and the bearings have not become unseated. Figure 4.17 and Figure 4.18.
   B. The tone ring is not damaged or bent. Figure 4.18.

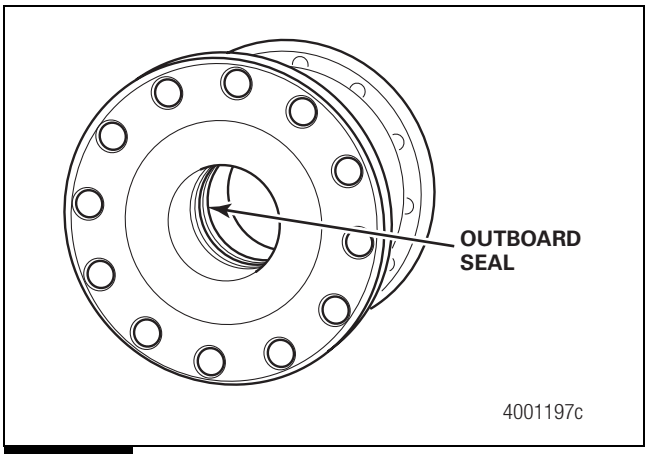

Figure 4.17

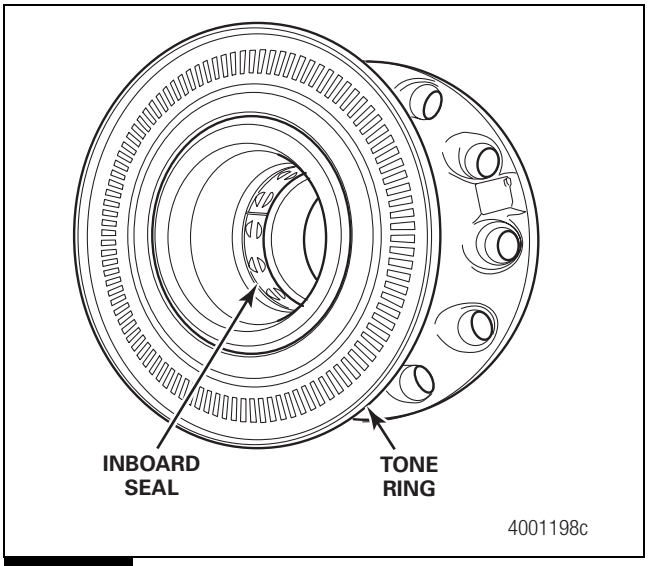

Figure 4.18

Hazard Alert Messages

Read and observe all Warning and Caution hazard alert messages in this publication. They provide information that can help prevent serious personal injury, damage to components, or both.

⚠ WARNING

To prevent serious eye injury, always wear safe eye protection when you perform vehicle maintenance or service.

Release all air from the suspension system before you raise the vehicle or remove any components. Pressurized air can cause serious personal injury.

Park the vehicle on a level surface. Block the wheels to prevent the vehicle from moving. Support the vehicle with safety stands. Do not work under a vehicle supported only by jacks. Jacks can slip and fall over. Serious personal injury and damage to components can result.

Removal

Wheel

1. Park the vehicle on a level surface. Set the parking brake. Block the wheels to prevent the vehicle from moving.
2. Drain the air from the air system.
3. Use a jack to raise the front of the chassis so that the front wheels are off the ground. Support the vehicle with safety stands.
4. Remove the wheel and tire assembly.

Caliper Assembly

Refer to Technical Bulletin TP-02173, DiscPlus™ DX195 and DX225 Air Disc Brakes, for caliper assembly removal procedures. Figure 5.1.

Wheel Adapter and Rotor

⚠ WARNING

Take care when you use lifting devices for service and maintenance procedures. Inspect lifting straps to ensure they are not damaged. Do not subject lifting straps to any shock or drop loading. Serious personal injury and damage to components can result.

1. Support the rotor so it does not fall when you remove the wheel adapter.
2. Remove the 12 capscrews from the wheel adapter. Figure 5.2.
3. Use a lifting device to remove the wheel adapter from the spindle.
4. Use a lifting device to remove the rotor.
5. Remove the spacer.

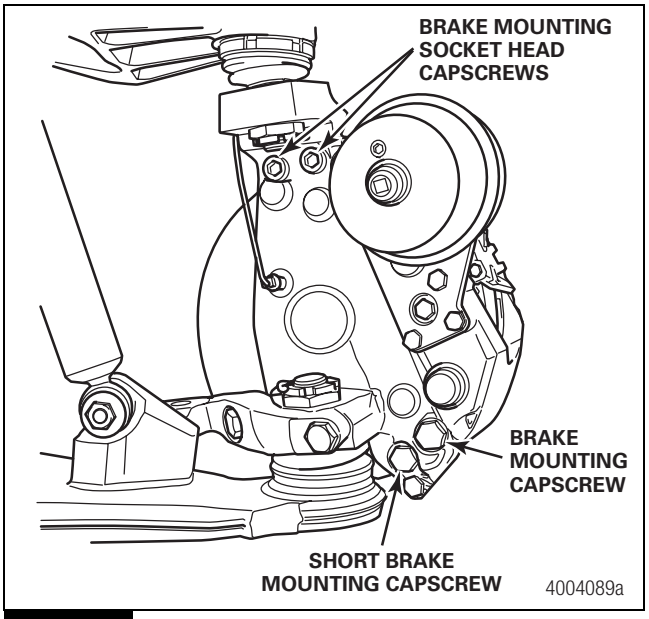

Figure 5.1

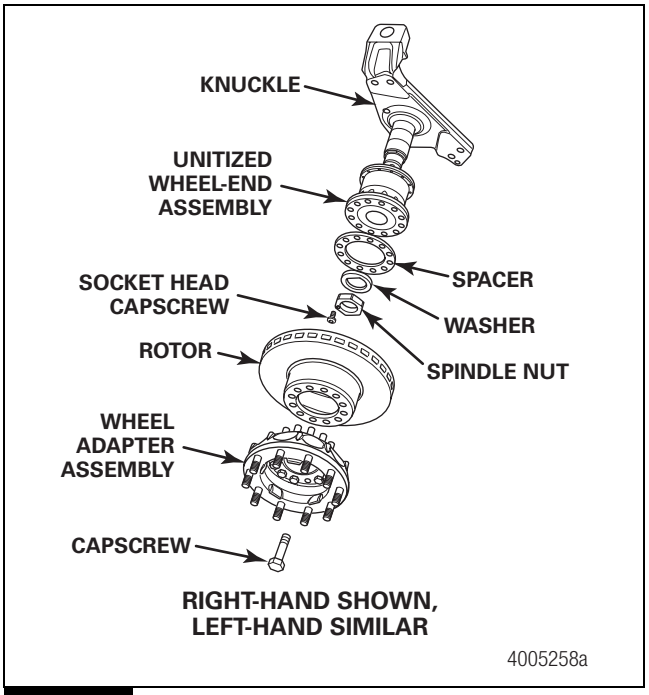

Figure 5.2

Unitized Wheel End

1. Remove the socket head capscrew from the spindle nut. Figure 5.2.
2. Remove the spindle nut from the spindle. The left-hand spindle nut has a right-hand thread and the right-hand spindle nut has a left-hand thread. Figure 5.2.
3. Remove the washer and unitized wheel end from the spindle. Figure 5.2.

Air Spring

⚠ WARNING

Verify that all personnel are clear of the vehicle before you inflate or deflate the air springs. The air suspension system has various pinch points that can cause serious personal injury.

1. Disconnect the air line from the air spring. Remove the two locknuts and washers that secure the air spring to the suspension subframe. Discard the locknuts and washers. Figure 5.3.

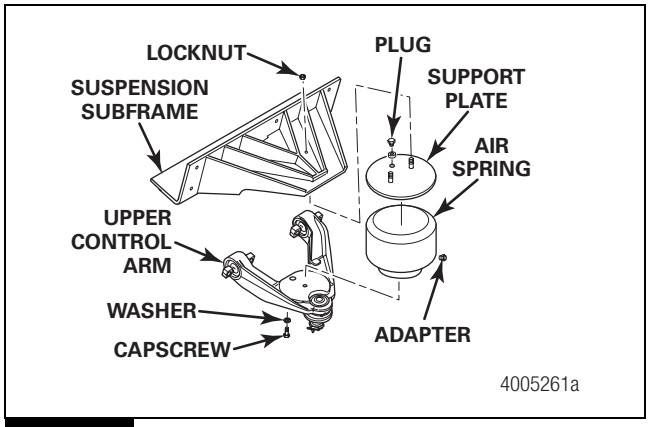

Figure 5.3

2. Remove the capscrew and washer that secure the air spring to the upper control arm. Remove the air spring.

Shock Absorber

⚠ CAUTION

Support the lower control arm before removing the shock absorber. Failure to do so can result in damage to the suspension.

1. Remove the lower shock absorber nut, washer and bolt. Figure 5.4.

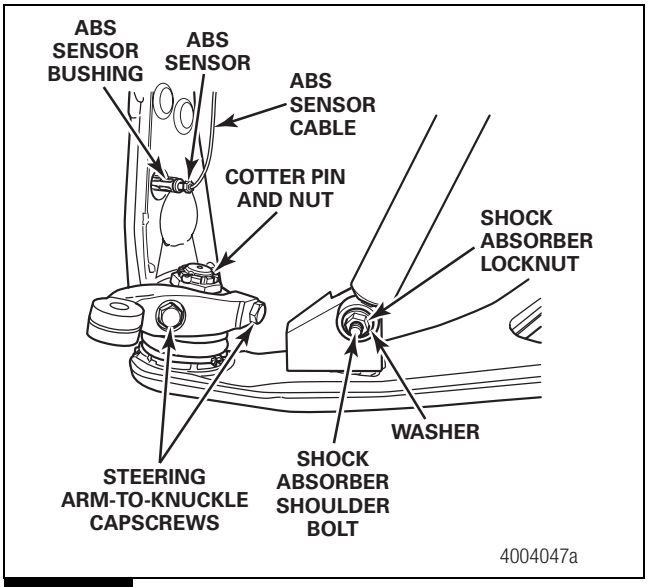

Figure 5.4

2. Remove the upper shock absorber locknut and washer. Remove the shock absorber shoulder bolt and the shock absorber. Discard the locknuts.

Steering Arm and Knuckle

⚠ CAUTION

Do not rotate the knuckle beyond the maximum allowable steer angles. Excessive rotation of the ball joint can damage the ball joints.

Ensure that the air springs are deflated before removing components.

1. Remove the cotter pin and nut that secure the tie rod to the steering arm. Separate the tie rod from the steering arm. Figure 5.5.

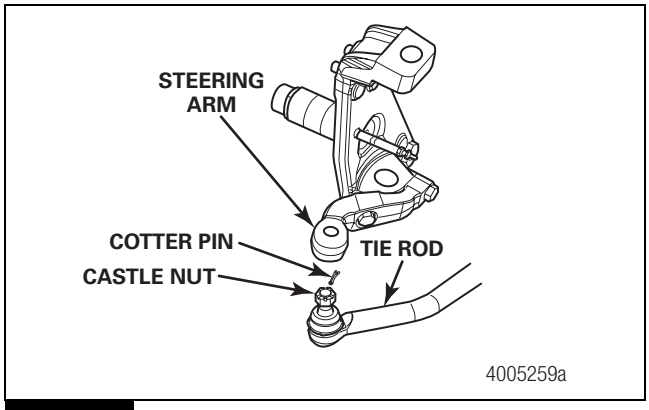

Figure 5.5

2. Remove the two capscrews that secure the steering arm to the knuckle. Remove the steering arm. Figure 5.4.
3. Remove the ABS sensor and ABS sensor bushing from the knuckle. Figure 5.4.
4. Support the knuckle so it does not fall during the following removal steps.
5. Remove the cotter pin and nut that secure the knuckle to the lower control arm ball joint. Figure 5.4.
6. Remove the cotter pin and nut that secure the knuckle to the upper control arm ball joint. Figure 5.6.

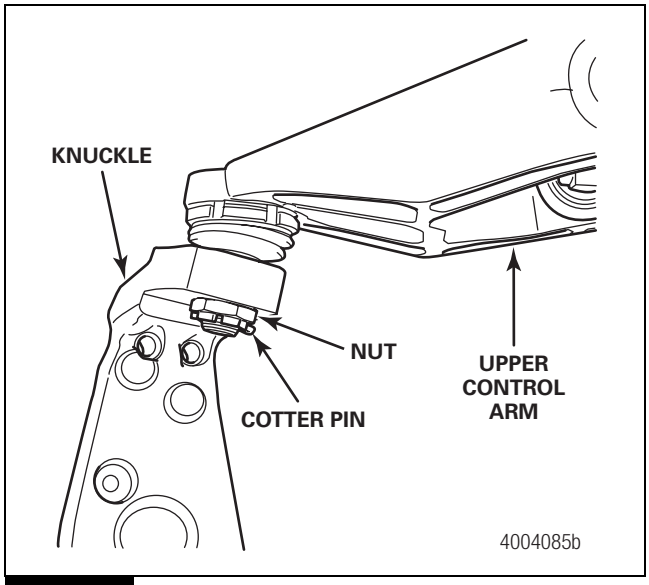

Figure 5.6

7. Use the correct tool to separate the upper control arm ball joint stud from the knuckle. Refer to Figure 10.1 in Section 10.
8. With the knuckle supported, use the correct tool to separate the lower ball joint stud from the knuckle. Refer to Figure 10.2 in Section 10. Remove the knuckle.

Upper and Lower Control Arm

1. Support the lower control arm. Figure 5.7.

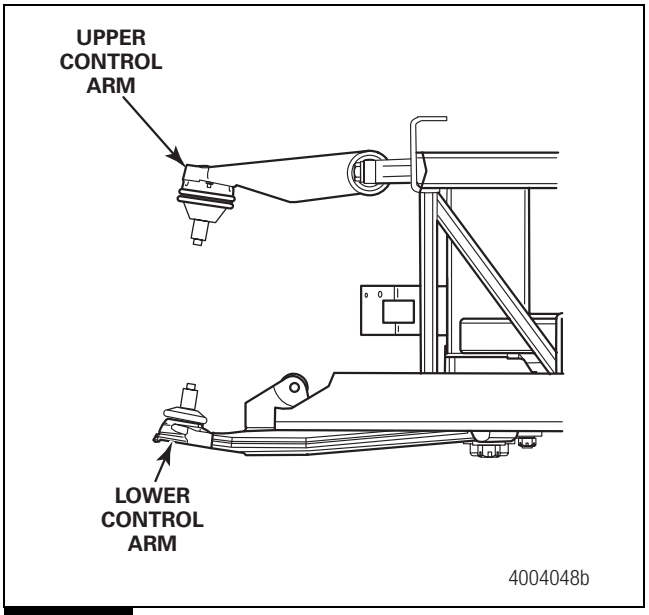

Figure 5.7

2. Remove the three capscrews that secure the lower shock absorber bracket to the lower control arm. Remove the lower shock absorber bracket. Figure 5.8.

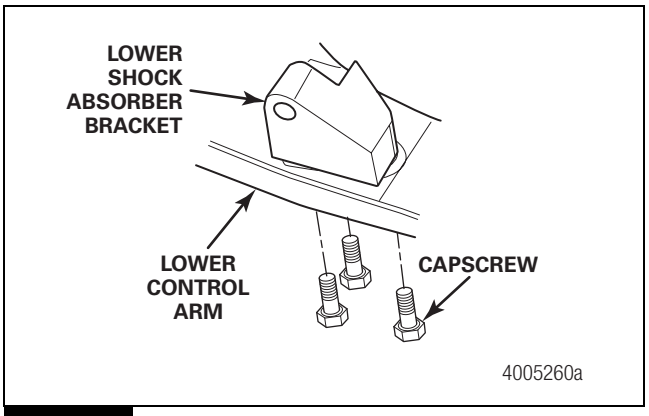

Figure 5.8

3. Remove the four capscrews and washers that secure the lower control arm to the suspension subframe. Remove the lower control arm. Figure 5.9.

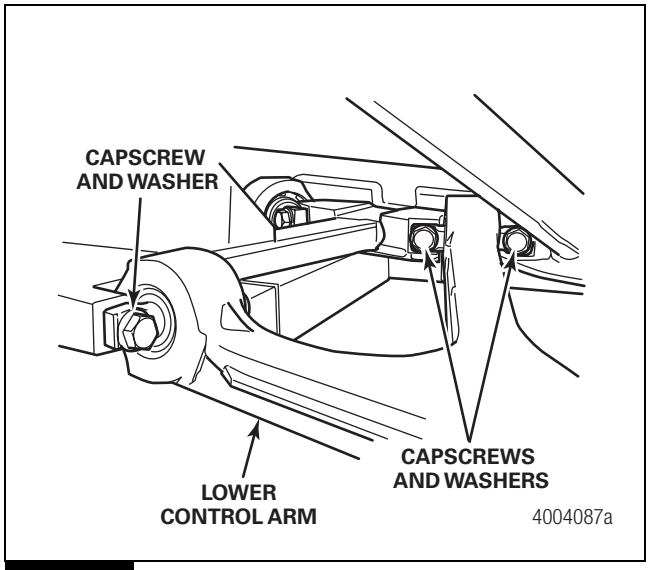

Figure 5.9

4. Support the upper control arm. Figure 5.3.
5. Remove the four capscrews and washers that secure the upper control arm to the suspension subframe. Remove the upper control arm. Figure 5.10.

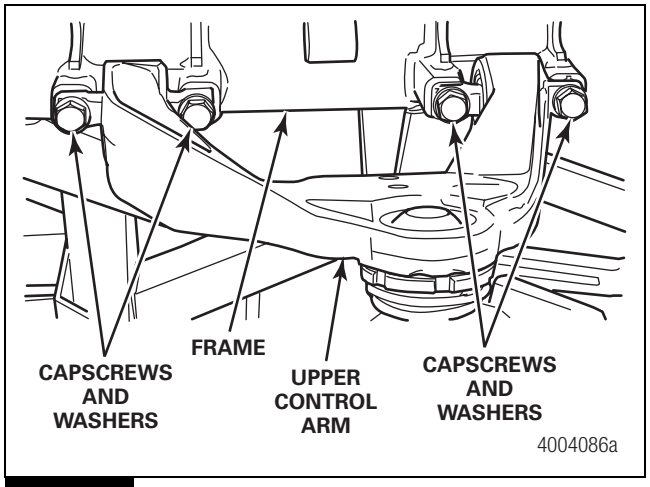

Figure 5.10

Disassembly

Upper and Lower Control Arms

Ball Joints

1. Place the upper control arm into a suitable holding fixture with the ball joint stud facing UP. Figure 5.11.

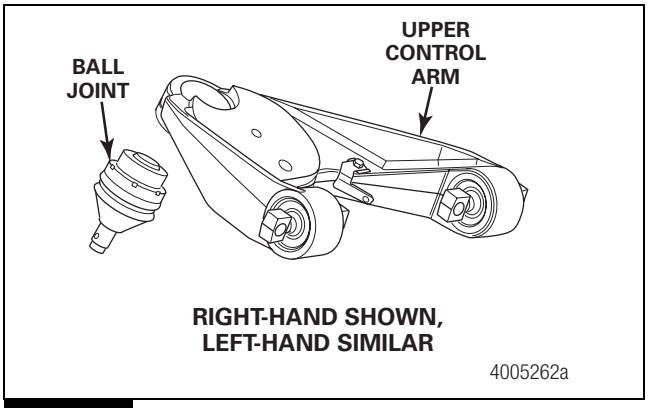

Figure 5.11

2. Bend the flange on the ball joint up from the depression on the upper control arm. Use a 65 mm spanner socket to unscrew the ball joint from the threaded bore in the upper control arm. Refer to Figure 10.3 in Section 10.
3. Place the lower control arm into a suitable holding fixture with the ball joint stud facing UP. Figure 5.12.

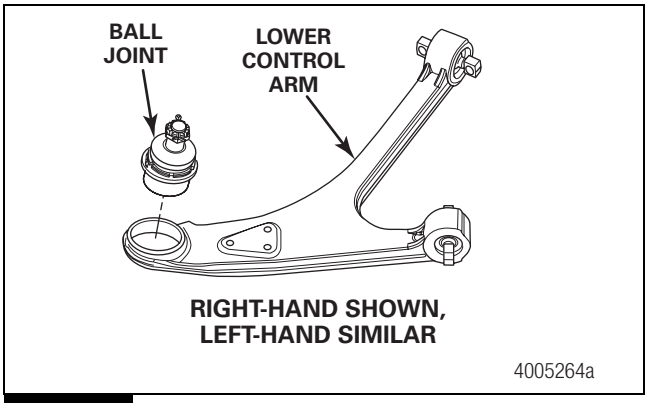

Figure 5.12

4. Bend the flange on the ball joint up from the depression on the lower control arm. Use an 80 mm spanner socket to unscrew the ball joint from the threaded bore in the lower control arm. Refer to Figure 10.4 in Section 10.

Pin Bushings

1. Remove the snap ring from the outer bushing bore. Figure 5.13 and Figure 5.14.

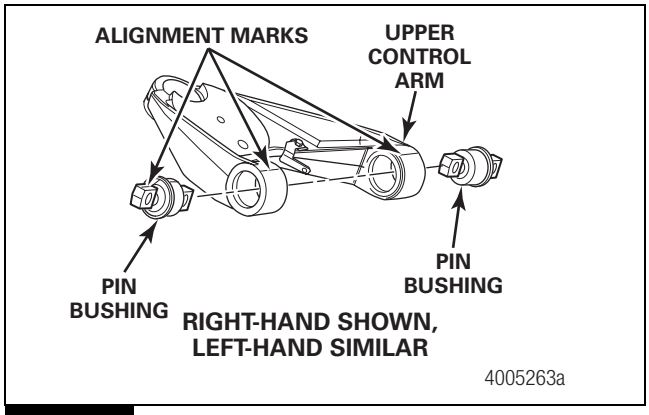

Figure 5.13

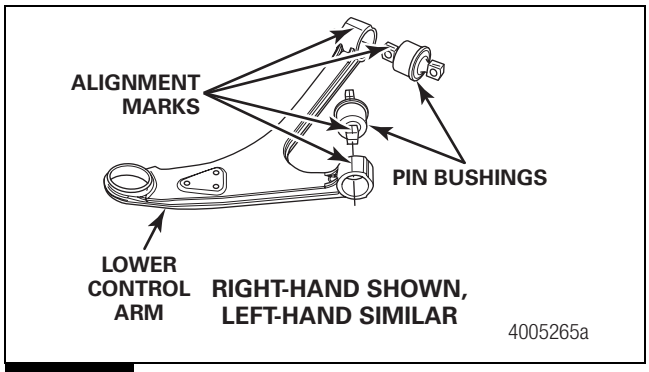

Figure 5.14

2. On the control arm, mark the position of the bushing's bar pin ears. You will need the mark to correctly align the bar pin ears when you install the new bushing.

⚠ WARNING

Observe all warnings and cautions provided by the press manufacturer to avoid damage to components and serious personal injury.

3. Place the control arm into a press with the pin bushing supported on a press plate. Pin bushings are removed from the CENTER OUT on upper control arms and from the CENTER IN on lower control arms, so it may be difficult to support the control arm in a press because of interference from the opposite pivot with the press ram. To avoid interference, position the control arm so that the control arm is pressed from the bushing.
4. Use suitable adapters to press the bar pin bushing from the control arm.

Removal

Steering Assembly

1. If necessary, remove the cotter pins and nuts that secure the tie rods to the steering, idler and relay arms. Separate the tie rods from the steering, idler and relay arms. Figure 5.15.

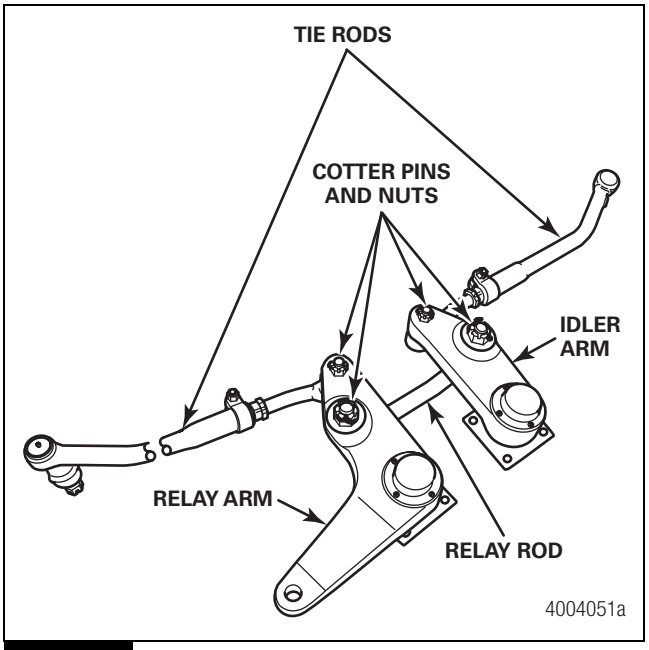

Figure 5.15

2. Loosen, but do not remove, the eight capscrews that secure the idler and relay arm assemblies to the suspension subframe. Lower the idler and relay arm assemblies so that the relay rod clears the subframe. This will provide more room to work when removing the castle nuts. Figure 5.16.

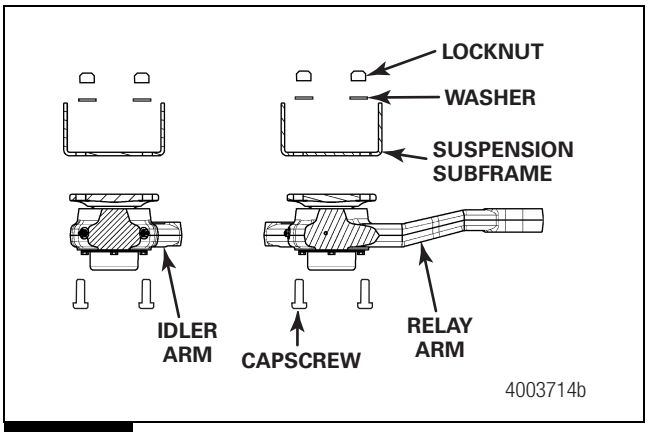

Figure 5.16

3. Remove the cotter pins and nuts that secure the relay rod to the idler and relay arms. Remove the relay rod. Figure 5.15.
4. Remove the four locknuts, capscrews and washers that secure the relay arm assembly to the suspension subframe. Remove the relay arm assembly. Figure 5.16.
5. Remove the four locknuts, capscrews and washers that secure the idler arm assembly to the suspension subframe. Remove the idler arm assembly. Figure 5.16.
6. Place the steering assembly components on a workbench.

Disassembly

Idler Arm and Relay Arm

1. Remove the capscrews and lock washers from the cover on the idler arm. Remove the cover. Figure 5.17.

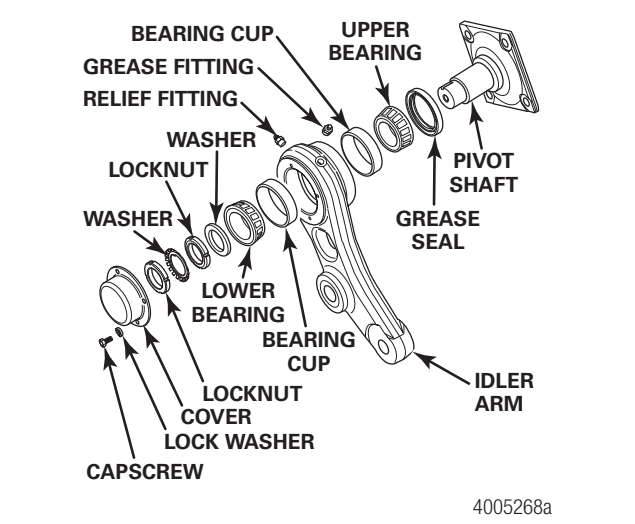

Figure 5.17

2. Use a spanner socket to remove the outer locking nut, tabbed lock washer, inner locking nut and washer from the pivot shaft. Refer to Section 10.
3. Remove the pivot shaft.
4. Remove the lower bearing cone.
5. Remove the grease seal from the idler arm.
6. Remove the upper bearing cone from the idler arm.
7. Remove the upper and lower bearing cups from the idler arm.
8. Repeat the procedure to disassemble the relay arm. Figure 5.18.

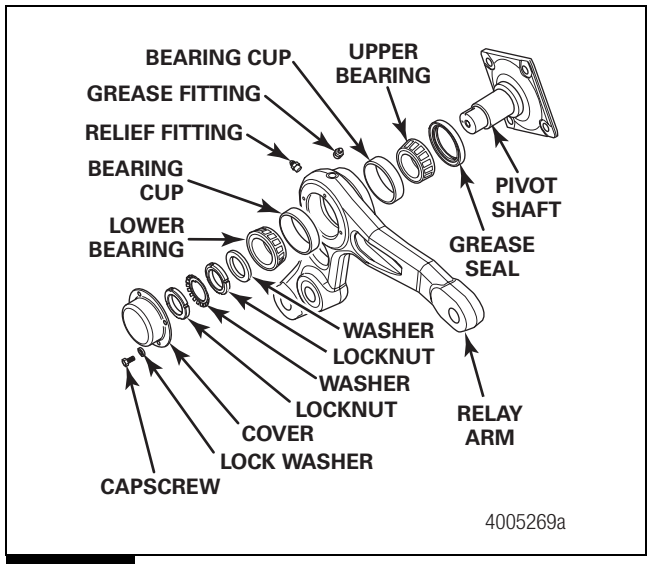

Figure 5.18

Hazard Alert Messages

Read and observe all Warning and Caution hazard alert messages in this publication. They provide information that can help prevent serious personal injury, damage to components, or both.

⚠ WARNING

To prevent serious eye injury, always wear safe eye protection when you perform vehicle maintenance or service.

Solvent cleaners can be flammable, poisonous and cause burns. Examples of solvent cleaners are carbon tetrachloride, and emulsion-type and petroleum-base cleaners. Read the manufacturer's instructions before using a solvent cleaner, then carefully follow the instructions. Also follow the procedures below.

- **Wear safe eye protection.**
- **Wear clothing that protects your skin.**
- **Work in a well-ventilated area.**
- **Do not use gasoline, or solvents that contain gasoline. Gasoline can explode.**
- **You must use hot solution tanks or alkaline solutions correctly. Read the manufacturer's instructions before using hot solution tanks and alkaline solutions. Then carefully follow the instructions.**

⚠ CAUTION

Do not use hot solution tanks or water and alkaline solutions to clean ground or polished parts. Damage to parts can result.

Clean, Dry and Inspect Parts

Ground or Polished Parts

Use a cleaning solvent to clean the ground or polished parts and surfaces. Kerosene or diesel fuel can be used for this purpose. DO NOT USE GASOLINE.

Do NOT clean ground or polished parts in a hot solution tank or with water, steam or alkaline solutions. These solutions will cause corrosion of the parts.

Rough Parts

Rough parts can be cleaned with the ground or polished parts. Rough parts also can be cleaned in hot solution tanks with a weak alkaline solution. Parts must remain in the hot solution tanks until they are completely cleaned and heated.

Dry Cleaned Parts

Parts must be dried immediately after cleaning. Dry parts with clean paper or rags, or compressed air. Do not dry bearings by spinning with compressed air.

Prevent Corrosion on Cleaned Parts

Apply a light oil to cleaned and dried parts that are not damaged and are to be immediately assembled. Do NOT apply oil to the brake linings or the brake rotors.

If the parts are to be stored, apply a good corrosion preventative to all surfaces. Do NOT apply the material to the brake linings or the brake rotors. Store the parts inside special paper or other material that prevents corrosion.

All tapered joints must be clean and dry with no lubrication or corrosion preventative applied to the mating surfaces.

Inspection

⚠ WARNING

Use only dye penetrant inspection techniques on unitized wheel-end hub units. Be careful not to get penetrant fluids into the bore of the hub unit. Do not use fluid immersion-based crack inspection techniques. The fluids can enter the joint between the inner bearing cones through the bore of the hub unit and damage the lubricant. Serious personal injury and damage to components can result.

Carefully inspect all disassembled parts before assembly. Inspect and replace any parts that are worn, cracked or damaged. Check for cracks with dye penetrant, magnetic flux or fluorescent particle testing methods.

Steering Arm and Knuckle

Inspect the knuckle and arm and replace any worn or damaged parts.

1. Inspect the upper and lower tapered bores in the knuckle for wear and damage. Inspect the taper on the ball joint studs.
2. Inspect the bearing contact surfaces and spindle for wear and damage.
3. Inspect the steering arm for cracks and the tapered bores in the steering arm for wear and damage. Inspect the taper on the tie rod ends.

Tie Rod Grease Fittings

1. If a grease fitting is missing, install a new one. Figure 6.1.

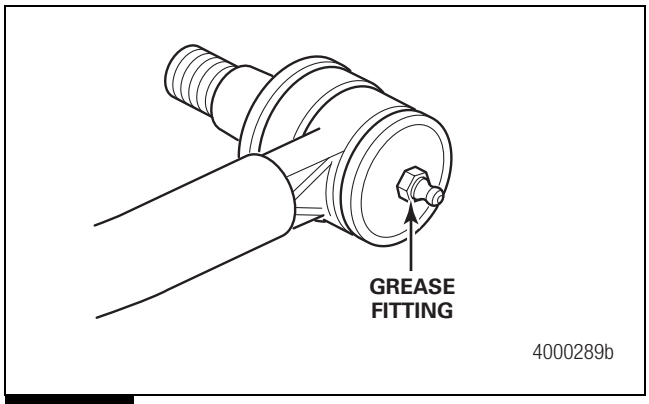

Figure 6.1

2. Tighten all grease fittings to 25 lb-in (2.8 N•m). Figure 6.2.

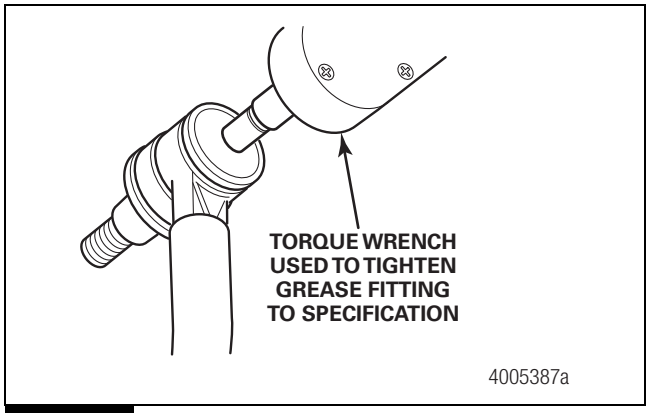

Figure 6.2

Hazard Alert Messages

Read and observe all Warning and Caution hazard alert messages in this publication. They provide information that can help prevent serious personal injury, damage to components, or both.

⚠ WARNING

To prevent serious eye injury, always wear safe eye protection when you perform vehicle maintenance or service.

Take care when you use Loctite® adhesive to avoid serious personal injury. Read the manufacturer's instructions before using this product. Follow the instructions carefully to prevent irritation to the eyes and skin.

Assembly

Upper and Lower Control Arms

Pin Bushings

1. Place the housing support sleeve onto a suitable press. Place the control arm onto the housing support sleeve with the bore facing UP. Refer to Section 10 for tool drawings. Figure 7.1, Figure 7.2 and Figure 7.3.

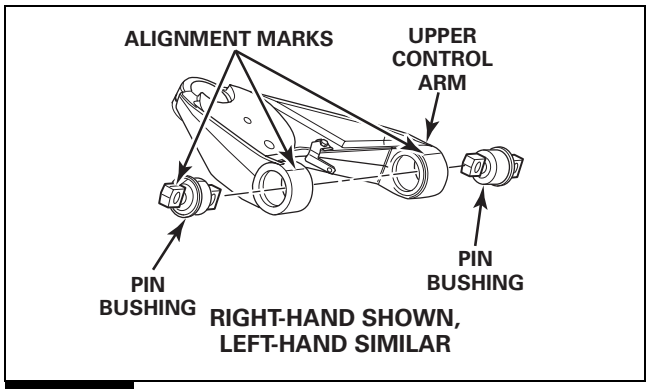

Figure 7.1

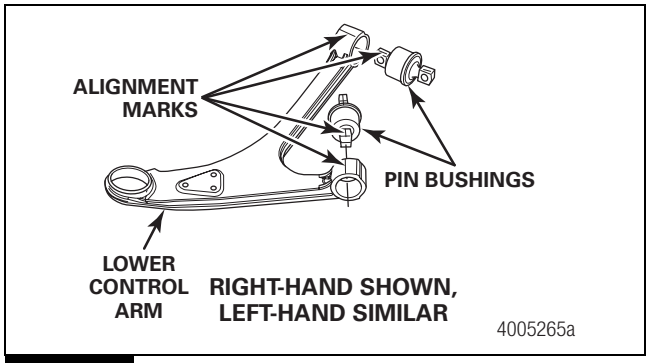

Figure 7.2

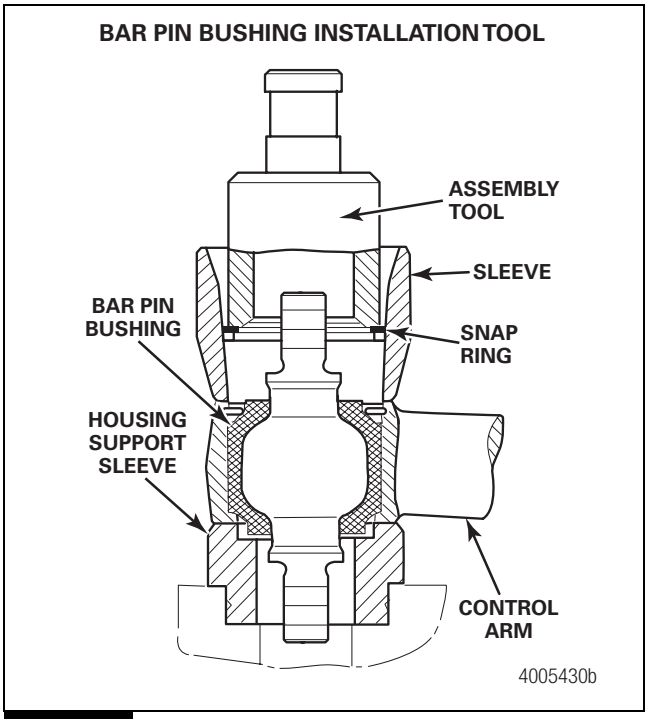

Figure 7.3

2. Place a new pin bushing into the control arm bore. Align the bar pin ears with the alignment marks on the control arm.
3. Place the installation sleeve over the pin bushing.
4. Place the assembly tool and the pin bushing snap ring through the installation sleeve.
5. Use a press to apply force on the assembly tool until the snap ring is seated in the housing.
6. Verify that the snap ring is fully seated.

Ball Joints

1. Check the bore for deformed threads, burrs, cracks and damage. Replace as necessary. Figure 7.4 and Figure 7.5.

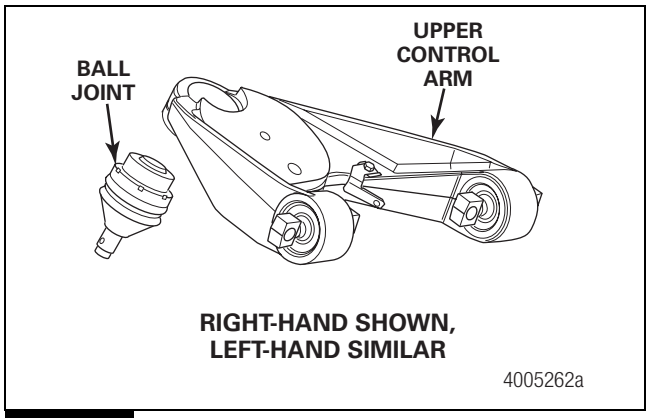

Figure 7.4

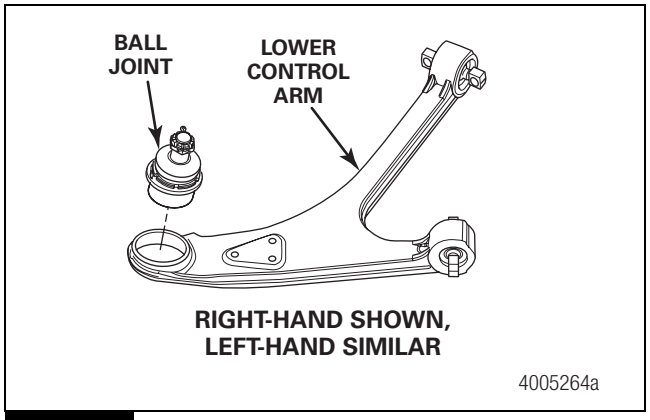

Figure 7.5

2. Clean the bore threads.
3. Apply Loctite® 243 threadlocker to the ball joint threads.
4. Install a new ball joint into the control arm. The upper control arm uses a 65 mm ball joint. The lower control arm uses an 80 mm ball joint.
5. Use the correct spanner socket to tighten the ball joint into the control arm bore to 1033-1106 lb-ft (1400-1500 N•m). Refer to Section 10. T
6. Peen the ball joint lip into the adjacent recess on the control arm. Figure 7.6 and Figure 7.7.

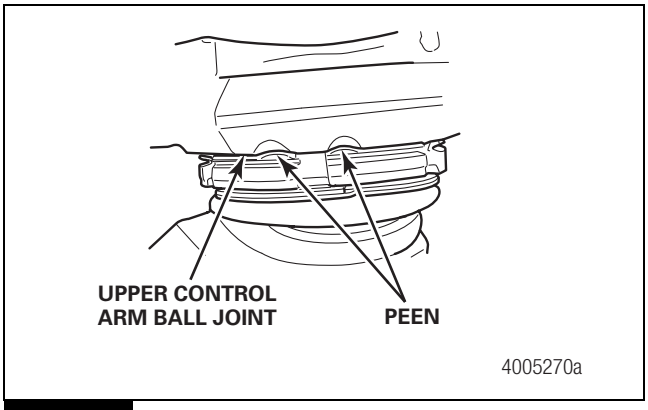

Figure 7.6

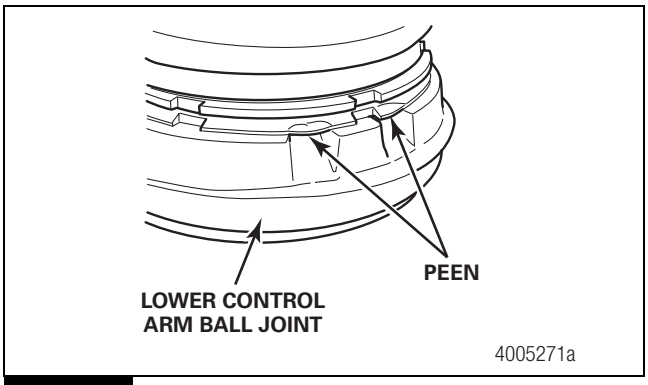

Figure 7.7

Installation

Upper and Lower Control Arm

1. Apply Loctite® 271 adhesive to the internal threads of the upper and lower control arm mounting brackets on the subframe.
2. Position the upper control arm onto the frame. Support the upper control arm. Install the four capscrews and washers that secure the upper control arm to the frame. The capscrews will be M18 or M20 depending on the suspension. Tighten the M18 capscrews to 225-273 lb-ft (305-370 N•m). Tighten the M20 capscrews to 369-480 lb-ft (500-650 N•m). Figure 7.8. T

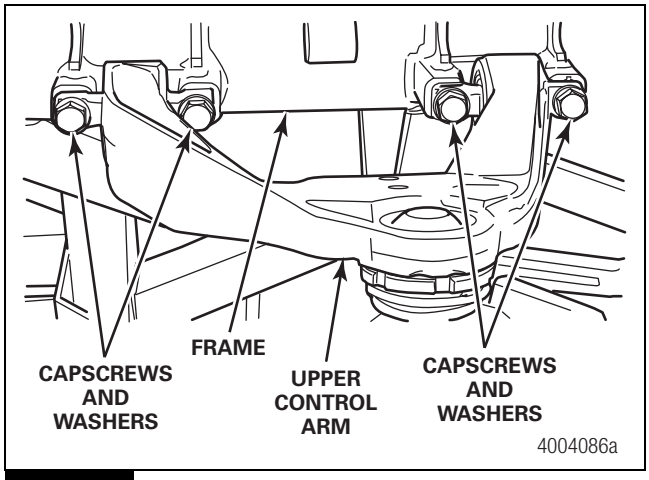

Figure 7.8

3. Position the lower control arm onto the frame. Support the lower control arm. Install the four capscrews and washers that secure the lower control arm to the frame. The capscrews will be M18 or M20 depending on the suspension. Tighten the M18 capscrews to 225-273 lb-ft (305-370 N•m). Tighten the M20 capscrews to 369-480 lb-ft (500-650 N•m). Figure 7.9.

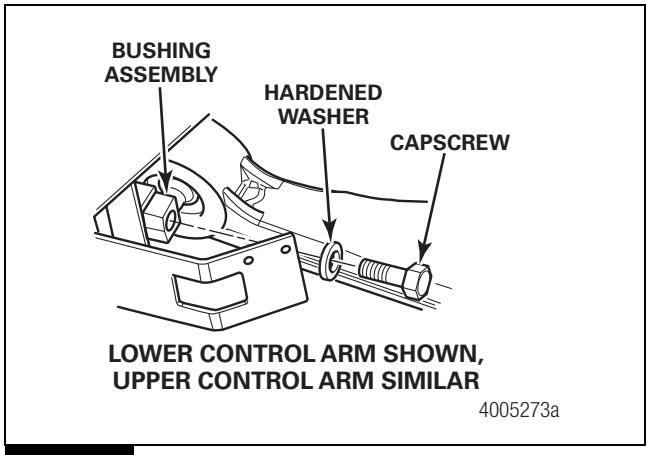

Figure 7.9

4. Position the lower shock absorber bracket onto the lower control arm. Install the three capscrews that secure the lower shock absorber bracket to the lower control arm. Tighten the capscrews to 180-188 lb-ft (245-255 N•m). Figure 7.10.

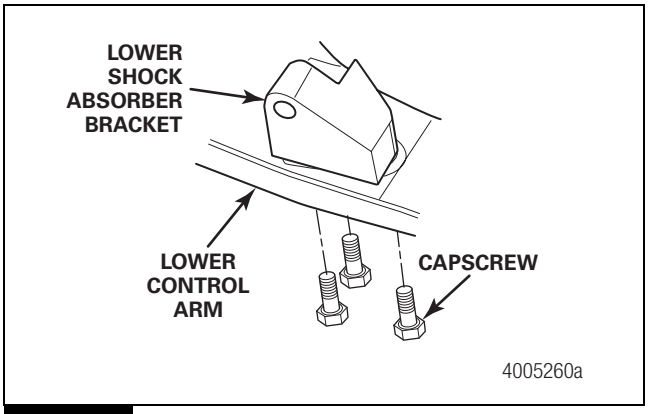

Figure 7.10

Steering Arm and Knuckle

1. Position the knuckle onto the lower control arm ball joint stud. Insert the upper control arm ball joint stud into the knuckle.
2. Install the nut that secures the knuckle to the lower control arm ball joint. Tighten the nut to 922-959 lb-ft (1250-1300 N•m). Continue to tighten the nut to align the nut slot with the cotter pin hole. Do not back off the nut to align the nut slot with the cotter pin hole. Install the cotter pin into the nut. Figure 7.11.

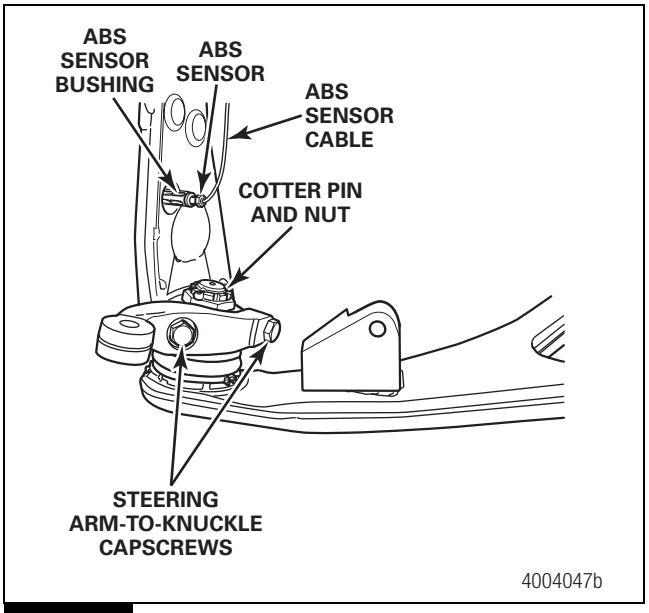

Figure 7.11

3. Install the nut that secures the upper control arm ball joint to the knuckle. Tighten the nut to 553-590 lb-ft (750-800 N•m). Continue to tighten the nut to align the nut slot with the cotter pin hole. Do not back off the nut to align the nut slot with the cotter pin hole. Install the cotter pin into the nut. Figure 7.12.

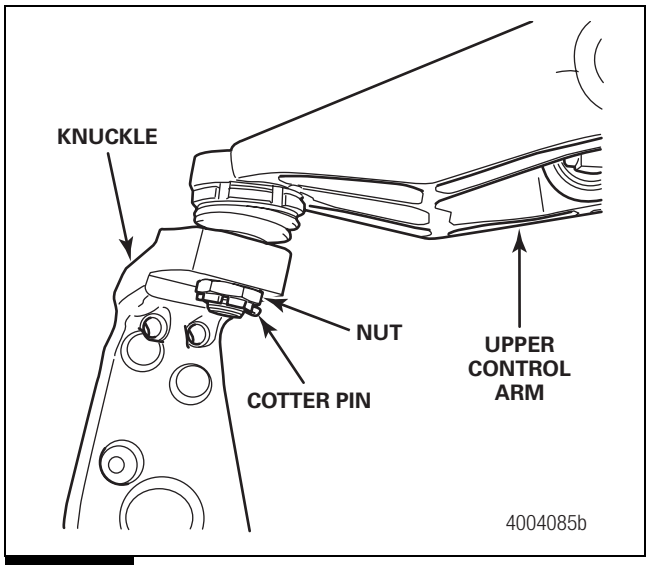

Figure 7.12

4. Position the steering arm onto the knuckle. Apply Loctite® 242 threadlocker, Meritor specification 2297-W-5431, to the two capscrews. Install the two capscrews that secure the steering arm to the knuckle. Tighten the capscrews to 406-428 lb-ft (550-580 N•m). Figure 7.11.

5. Install the ABS sensor bushing and ABS sensor into the knuckle using the procedure in technical bulletin TP-02102, Installation Instructions for Meritor WABCO Wheel Speed Sensor Replacement Kit. For service instructions for ABS braking systems, refer to Maintenance Manual 28, Anti-Lock Braking Systems (ABS) for Trucks, Tractors and Buses, For C Version ECUs; and Maintenance Manual 30, Anti-Lock Braking Systems (ABS) for Trucks, Tractors and Buses, For D Version ECUs. To obtain these publications, refer to the Service Notes page on the front inside cover of this manual. Figure 7.11.

Unitized Wheel End

Inspect the unitized wheel end according to the replacement unitized wheel end inspection procedure in Section 4.

1. Clean the unitized wheel end inner bore and spindle with a clean dry rag. Do not apply any solvent.

2. Check the bore of the unitized wheel end for any obstructions and check the spindle for any nicks or burrs.

⚠ WARNING

Do not apply anti-seize or anti-fretting compound to the spindle threads. These compounds decrease a fastener assembly's capability to maintain clamp load, which can cause wheels to loosen and separate from the vehicle. Serious personal injury and damage to components can result.

3. Coat the inside of the unitized wheel end with anti-seize compound. Verify that the inner and outer bearing races are covered. Do not apply anti-seize or anti-fretting compound to the spindle or threads. Remove any anti-seize or anti-fretting compound that may have dripped onto the spindle threads.

⚠ CAUTION

Align the unitized wheel end STRAIGHT onto the spindle. Do not allow the assembly to misalign and contact the spindle threads. Bearing damage can occur that requires replacement of the entire unitized wheel end.

4. Carefully align the unitized wheel end bore with the spindle and slide the unitized wheel end STRAIGHT onto the spindle. Figure 7.13.

   - **If the unitized wheel end does not slide on easily:** Do not force it onto the spindle. The unitized wheel end can become jammed on the spindle if it is not aligned correctly with the spindle.

   - **If the unitized wheel end becomes jammed on the spindle:** Carefully remove the unitized wheel end from the spindle so that the inner bearings do not disassemble or loosen from the unitized wheel end.

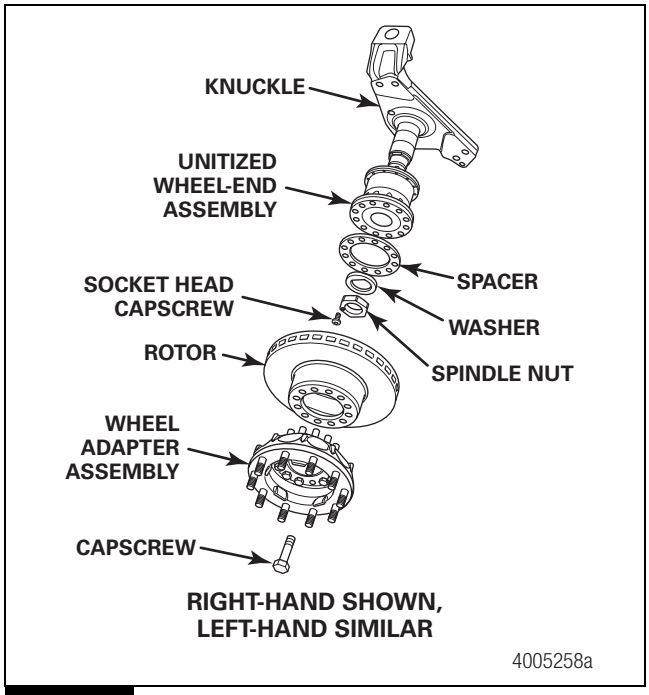

Figure 7.13

5. Install the "D" washer and locknut onto the spindle. The left-hand spindle nut has a right-hand thread and the right-hand spindle nut has a left-hand thread. Tighten the locknut to 406-420 lb-ft (550-570 N•m).
6. Apply Loctite® 242 threadlocker, Meritor specification 2297-W-5431, to the socket head capscrew. Install the socket head capscrew into the locknut. Tighten the capscrew to 22-26 lb-ft (30-35 N•m).

Wheel Adapter and Rotor

⚠ WARNING

Take care when you use lifting devices for service and maintenance procedures. Inspect lifting straps to ensure they are not damaged. Do not subject lifting straps to any shock or drop loading. Serious personal injury and damage to components can result.

1. Install the spacer into the rotor.
2. Use a lifting device to position the rotor onto the wheel bearing assembly.
3. Use a lifting device to position the wheel adapter onto the wheel bearing assembly.
4. Apply Loctite® 242 threadlocker, Meritor specification 2297-W-5431, to the 12 capscrews. Install the capscrews into the wheel adapter. Tighten the capscrews to 321-339 lb-ft (435-460 N•m). Figure 7.13.

Caliper Assembly

1. Position the caliper assembly onto the rotor.
2. Install the four brake mounting capscrews. Tighten the capscrews to 402-494 lb-ft (545-670 N•m). You must install the short capscrew into the correct position. Figure 7.14.

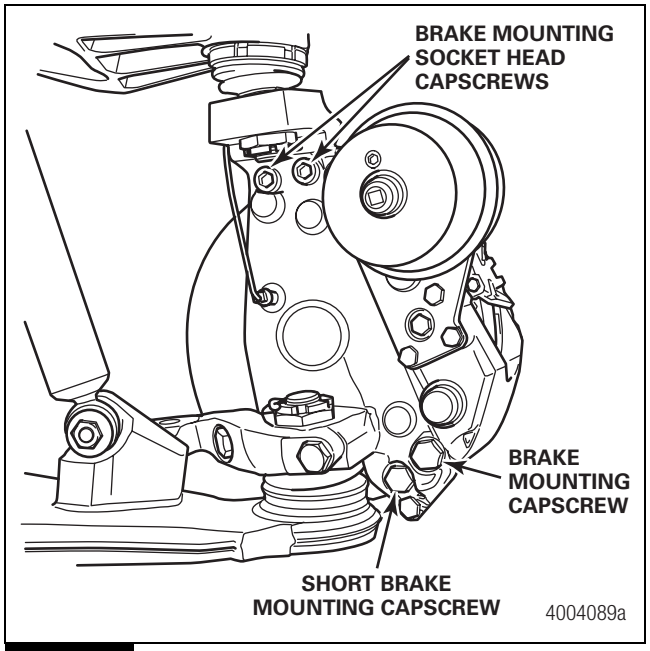

Figure 7.14

3. Remove the plug from the hole in the brake chamber. Connect the air line to the brake chamber.
4. Adjust the brake. Refer to Technical Bulletin TP-02173, DiscPlus™ DX195 and DX225 Air Disc Brakes. To obtain this publication, refer to the Service Notes page on the front inside cover of this manual.
5. Install the tire and wheel assembly onto the wheel adapter. Tighten the wheel lug nuts to specification. Refer to the vehicle manufacturer's manual for the tightening sequence and the wheel lug nut torque specifications.

Air Spring

1. Position the air spring onto the upper control arm. Install the bolt and washer that secure the air spring to the upper control arm. Tighten the bolt to 96-100 lb-ft (130-135 N•m). Figure 7.15.

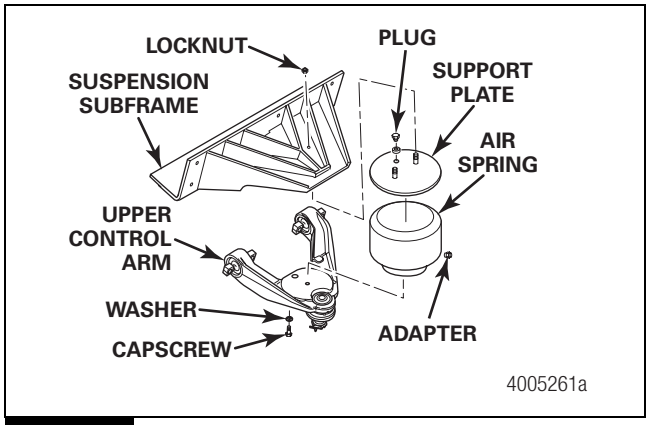

Figure 7.15

2. Install the two nuts and washers that secure the air spring support plate to the subframe. Tighten the nuts to 69-87 lb-ft (94-118 N•m). Install the adapter and tighten it to 30-33 lb-ft (40-44 N•m). Connect the air line to the air spring adapter. Install the plug and tighten it to 41-44 lb-ft (55-60 N•m). Figure 7.15.

Shock Absorber

1. Position the shock absorber and install the upper shock absorber shoulder bolt, nut and washer. Tighten the nut to 270-350 lb-ft (366-474 N•m). Figure 7.16.
2. Install the lower shock absorber shoulder bolt, nut and washer. Tighten the nut to 270-350 lb-ft (366-474 N•m). Figure 7.17.

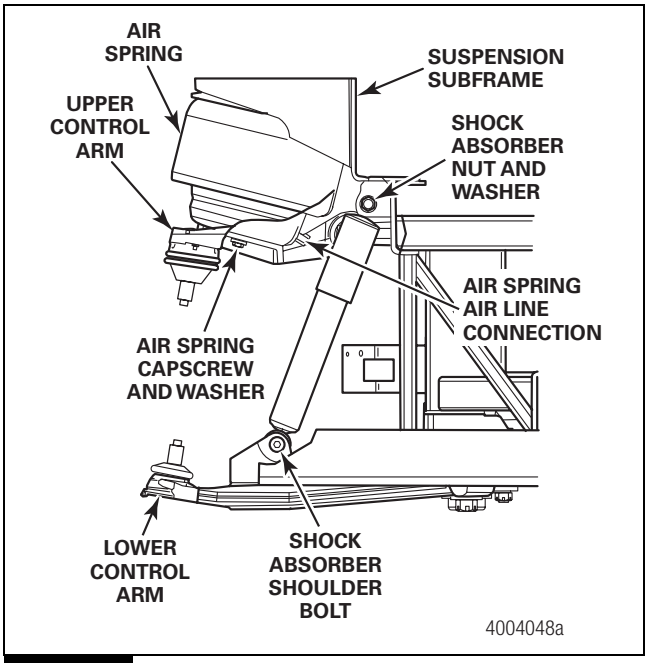

Figure 7.16

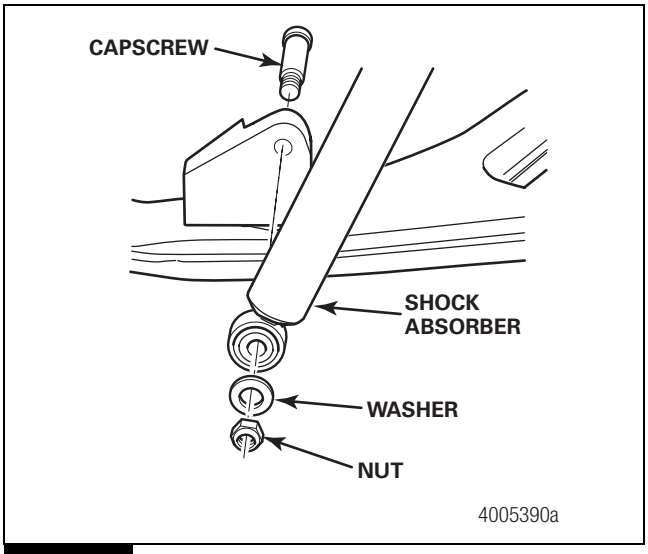

Figure 7.17

Assembly

Idler Arm and Relay Arm

1. Install the upper and lower bearing cups into the idler arm. Figure 7.18.

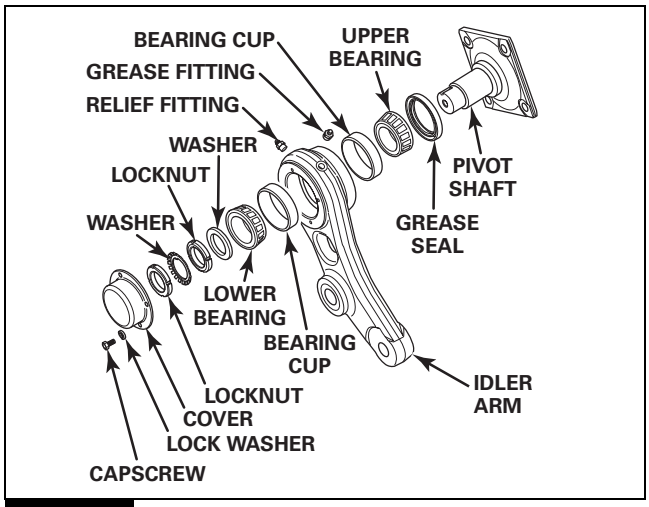

Figure 7.18

2. Pack both bearing cones with grease. Use grease that meets the specifications shown in Table D.
3. Install the upper bearing cone into the upper bearing cup in the idler arm.
4. Install the grease seal 0.118-inch (3 mm) into the idler arm. Figure 7.19.

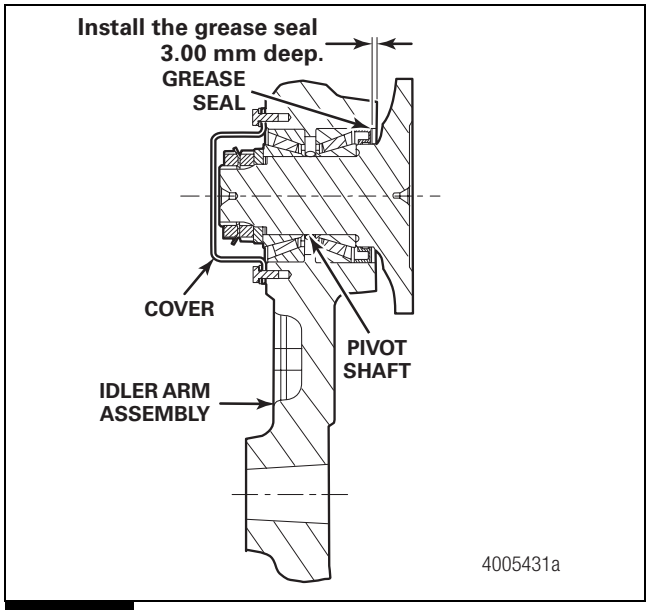

Figure 7.19

5. Install the pivot shaft into the idler arm.
6. Install the lower bearing cone into the lower bearing cup in the idler arm.
7. Install the washer onto the pivot shaft.
8. Install the inner locknut onto the pivot shaft. Use a spanner socket to tighten the locknut to 74 lb-ft (100 N•m). Refer to Section 10.
9. Rotate the idler arm a minimum of five times, plus and minus 1/2 turn. Tighten the locknut to 74 lb-ft (100 N•m).
10. Rotate the idler arm a minimum of five times, plus and minus 1/2 turn. Loosen the inner locknut.
11. Use a spanner socket to tighten the inner locknut to 37 lb-ft (50 N•m). Refer to Section 10.
12. Install the tabbed lock washer onto the pivot shaft.
13. Install the outer locknut onto the pivot shaft. Use a spanner socket to tighten the outer locknut to 37 lb-ft (50 N•m). Refer to Section 10.
14. Continue to tighten the outer locknut until one slot of the locknut aligns with the lock washer tab.
15. Bend the lock washer tab into the outer locknut slot.
16. Hold the outer locknut and use a spanner socket to tighten the inner locknut against the outer locknut to 166-202 lb-ft (225-275 N•m). Refer to Section 10.
17. Apply Loctite® Gasket Maker 518 sealant to the idler arm surface where the cover contacts the arm.
18. Install the cover, lock washers and capscrews onto the idler arm. Tighten the capscrews to 7-9 lb-ft (10-12 N•m).
19. Fill the idler arm with grease until grease purges from the relief fitting.

20. Repeat the procedure to assemble the relay arm. Figure 7.20.

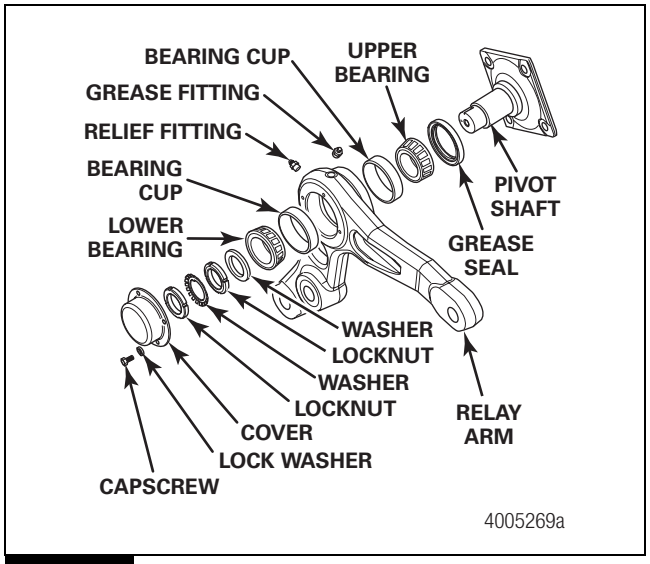

Figure 7.20

Installation

Steering Assembly

⚠ WARNING

Before you perform the assembly procedures, thoroughly clean the mounting surfaces. Rust and oil decrease a fastener assembly's capability to maintain clamp load. Serious personal injury and damage to components can result.

1. Clean any rust or oil from the subframe in the area under the eight washers. Figure 7.21.

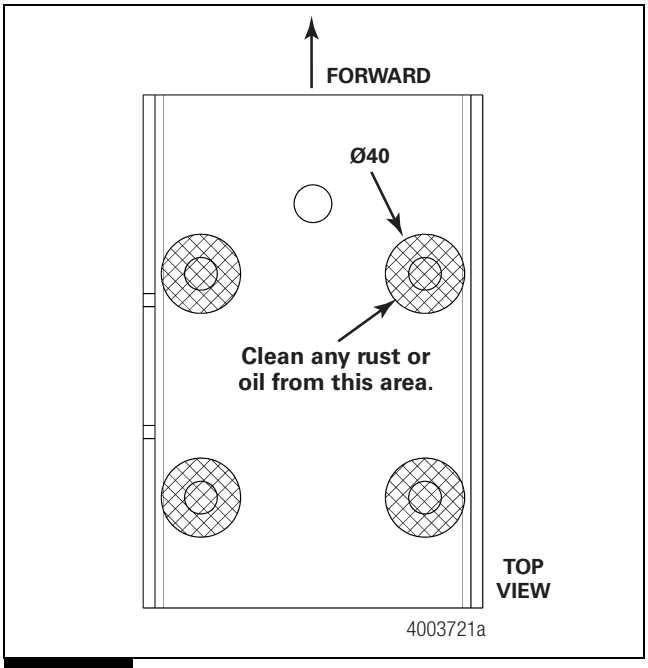

Figure 7.21

2. Clean any rust or oil from the subframe in the area that the relay and idler shaft are installed. Figure 7.22.

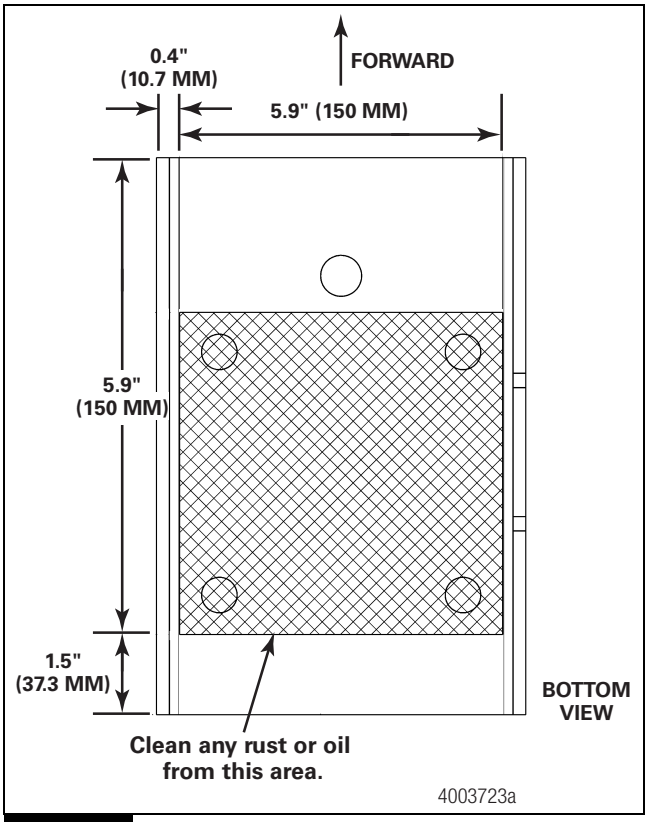

Figure 7.22

3. Verify that the pivot shaft mounting flanges on the idler arm and relay arm assemblies are clean.

4. Install the relay arm and idler arm assemblies to the subframe with eight new 5/8-11 x 2.0 capscrews, locknuts and hardened washers. Do not tighten the locknuts completely. Ensure that the locknut is threaded onto the capscrew at least 5/8-inch (15.88 mm). Leave enough room to install the relay rod. Figure 7.23.

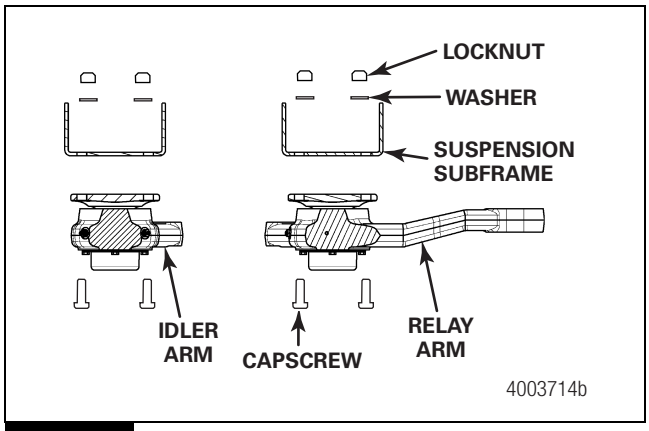

Figure 7.23

5. Position the relay rod into the idler arm and relay arm. Install the castle nuts that secure the relay rod to the idler arm and relay arm. Tighten the nuts to 245-260 lb-ft (332-353 N•m). Continue tightening the nuts to align the nut slot with the cotter pin hole. Do not back off the nuts to align the nut slot with the cotter pin hole. Install the cotter pins. Figure 7.24. T

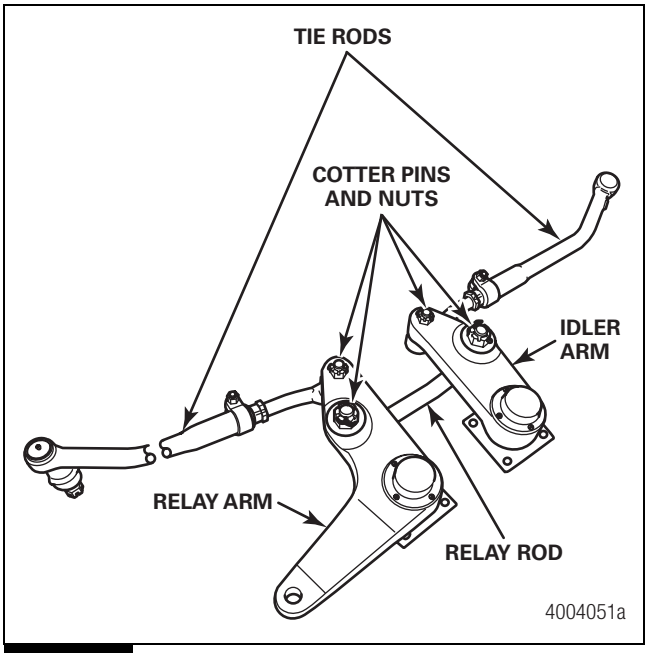

Figure 7.24

6. Tighten the idler arm and relay arm nuts to 180-210 lb-ft (245-286 N•m). Use a crossing pattern to tighten the nuts. Figure 7.25. T

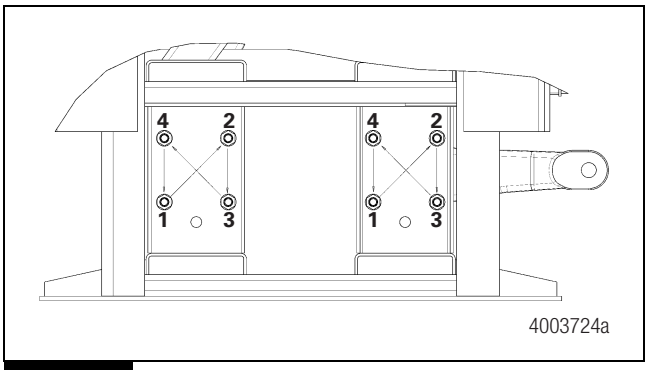

Figure 7.25

7. Position the tie rods into the idler arm and relay arm. Install the castle nuts and bolts that secure the tie rods to the idler arm and relay arm. Tighten the nuts to 245-260 lb-ft (332-353 N•m). Continue tightening the nuts to align the nut slot with the cotter pin hole. Do not back off the nuts to align the nut slot with the cotter pin hole. Install the cotter pins. Figure 7.24. T

8. Verify that the tie rods are the correct length and are within 1/8-inch (3 mm) of each other. The tie rod ends and the slotted adjustment sleeves must have the correct engagement with the tie rod. Adjust the tie rod length as necessary. Figure 7.26.

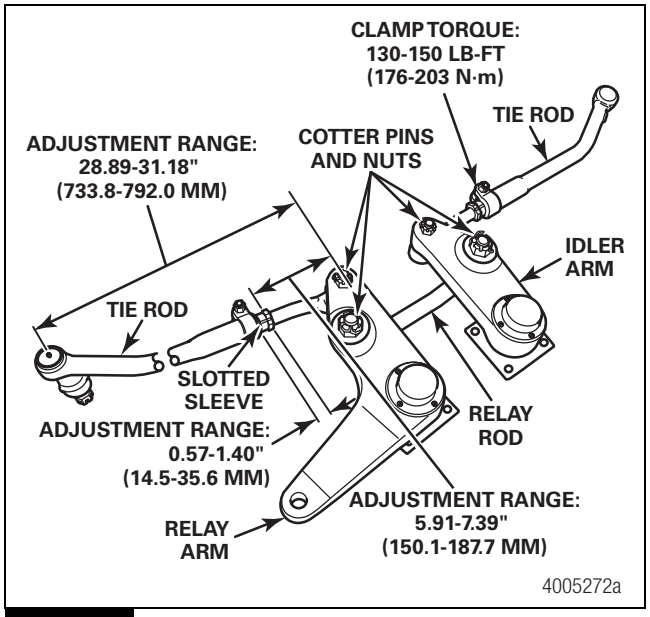

Figure 7.26

9. Position the tie rod into the steering arm. Install the nut that secures the tie rod to the steering arm. Tighten the nut to 245-260 lb-ft (332-353 N•m). Continue tightening the nut to align the nut slot with the cotter pin hole. Do not back off the nut to align the nut slot with the cotter pin hole. Install the cotter pin. Figure 7.27. T

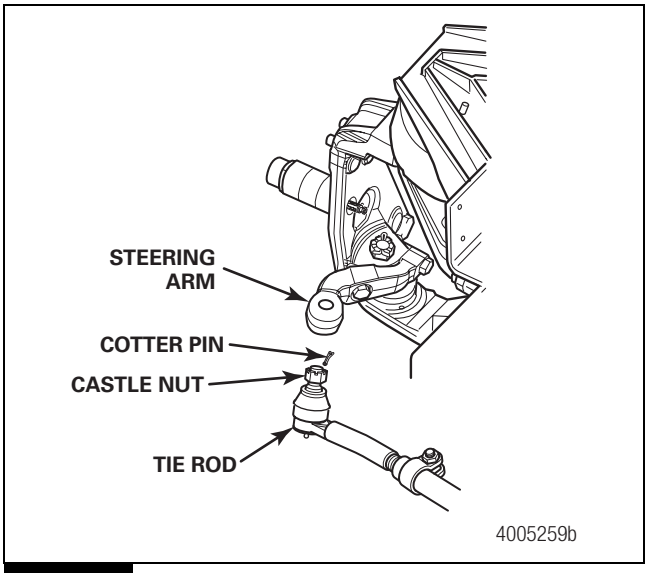

Figure 7.27

Hazard Alert Messages

Read and observe all Warning and Caution hazard alert messages in this publication. They provide information that can help prevent serious personal injury, damage to components, or both.

⚠ WARNING

To prevent serious eye injury, always wear safe eye protection when you perform vehicle maintenance or service.

Park the vehicle on a level surface. Block the wheels to prevent the vehicle from moving. Support the vehicle with safety stands. Do not work under a vehicle supported only by jacks. Jacks can slip and fall over. Serious personal injury and damage to components can result.

Release all air from the air suspension system before you raise the vehicle or remove any components. Pressurized air can cause serious personal injury.

Adjustment

Inspection Before Alignment

Before aligning the vehicle, perform a complete inspection and adjust the vehicle ride height.

Wheels and Tires

Verify that the wheels and tires meet the vehicle manufacturer's specifications. Verify that the tires are inflated to the pressure specified by the vehicle manufacturer.

Suspension

Inspect the suspension. Refer to Section 4.

Inspect the rear drive and tag axles, and suspension if equipped. Repair or replace any worn or damaged components. Refer to the suspension or vehicle manufacturer's instructions for the correct procedures.

Vehicle Ride Height Adjustment

The specified ride height is located on the suspension identification tag on the lower left-hand side of the subframe. Refer to the vehicle manufacturer's instructions to adjust the ride height.

Adjust the rear suspensions to the ride height specified by the suspension or vehicle manufacturer.

Maximum Turn Angle

⚠ CAUTION

Do not exceed the maximum turn angle specified by the suspension or vehicle manufacturer. If the angle is exceeded, the steering arms, tie rods and tie rod ends will be damaged.

The stop bolt on the back of the knuckle controls the maximum turn angle. If the stop bolt is missing, bent or broken, the system requires adjustment. Use the mechanical stop in the steering system to adjust the pressure relief.

Check the turn angle if the front tires rub against the frame or if the steering gear has been serviced. Use an alignment machine to check the angle. Refer to the alignment equipment manufacturer's procedures.

The stop bolt should NOT touch the lower control arm. The stop bolt should always have a minimum clearance of 1/8-inch (3 mm) when the knuckle is in the full-turn position as shown in Figure 8.1.

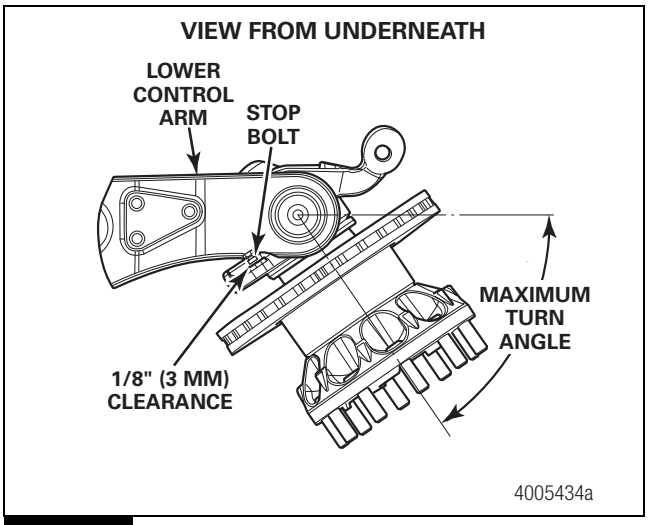

Figure 8.1

If the steering system is out-of-adjustment, inspect the steering arm for damage. Use a magnetic particle or liquid dye penetrant inspection procedure to inspect the steering arm. Pay particular attention to the bend, the taper and the area near the ball stud. Refer to the vehicle manufacturer's manual for additional inspection procedures.

Stop Bolt Adjustment

1. Place a 1/8-inch (3 mm) spacer between the stop bolt and the boss on the lower control arm.
2. Turn the steering wheel until the boss on the lower control arm touches the spacer in front of the stop bolt. Measure the turn angle. Figure 8.2.

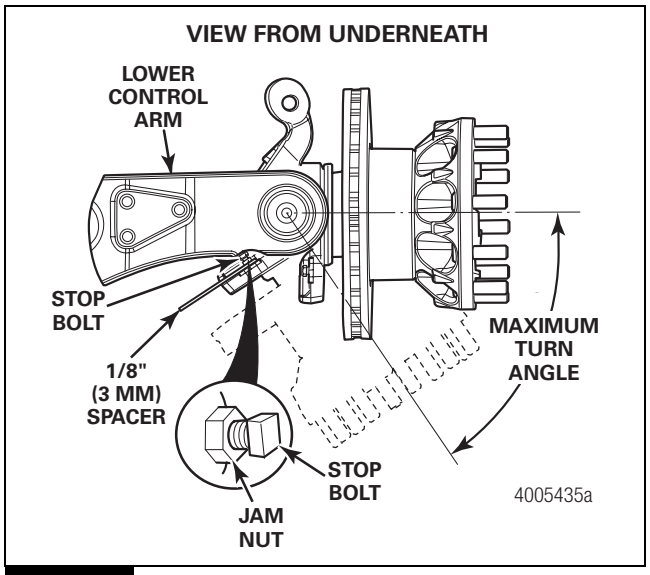

Figure 8.2

3. If the maximum turn angle does not meet the vehicle manufacturer's specifications, correct the maximum angle. Adjust the pressure relief.
4. When the maximum turn angle is correct:
   A. Loosen the stop bolt jam nut. Figure 8.2.
   B. Insert a 1/8-inch (3 mm) spacer and adjust the stop bolt.
   C. Tighten the jam nut to 103-111 lb-ft (140-150 N•m).

Adjust the Pressure Relief in the Power Steering System, Set the Maximum Turn Angle

⚠ CAUTION

In power steering systems, the hydraulic pressure should relieve or "drop off" at the end of the steering stroke, with 1/8-inch (3 mm) minimum clearance at the stop bolt. If the pressure does not relieve, the steering system components will be damaged.

The pressure relief in the power steering system stops or reduces forces applied to the axle when the wheel is moved in the full-turn position.

Check the pressure relief if the steering arm is damaged or the power steering gear is serviced.

Two types of systems are used to adjust the pressure relief.

- Mechanical stop on the Pitman arm or in the assist cylinder
- Hydraulic pressure relief in the power steering gear

⚠ CAUTION

Meritor does not recommend a power steering system that does not have mechanical stops or pressure relief before the maximum turn angle is obtained. Damage to the axle can result.

Mechanical Stop

Use the mechanical stop in the steering system to adjust the pressure relief. Do not use the stop bolt on the knuckle alone to adjust the poppet valve pressure relief.

Refer to the vehicle manufacturer's procedures.

⚠ CAUTION

Use a pressure gauge to verify that the pressure drops from the maximum system delivery pressure to gear box manufacturing recommendation BEFORE the full turning angle is achieved. If the pressure does not drop, damage to the front axle components will result.

Steering systems with mechanical stops are adjusted when the wheels are turned to the full-right and full-left turn positions. The stop travel is set at 1/8-inch (3 mm) before the stop bolt contacts the lower control arm boss. Figure 8.3 and Figure 8.4.

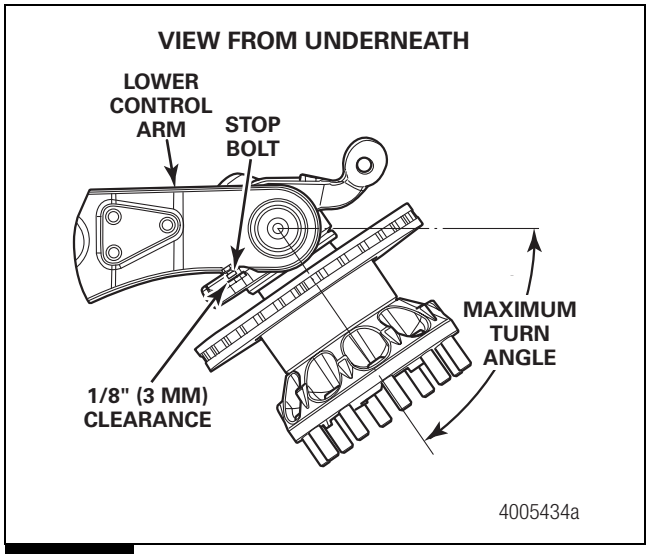

Figure 8.3

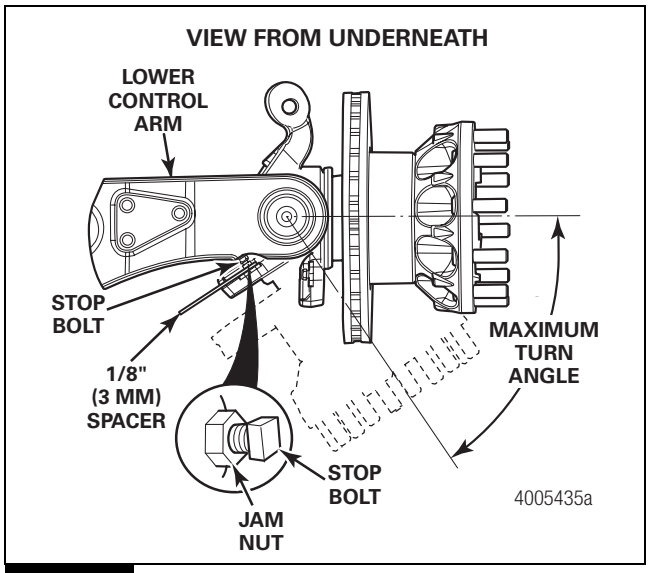

Figure 8.4

Hydraulic Pressure Relief in the Steering Gear

Refer to the vehicle manufacturer's procedure. The stop bolt should always have a minimum clearance of 1/8-inch (3 mm) between the stop bolt and the lower control arm boss.

Hydraulic steering gears with poppet valves are adjusted with a spacer between the stop bolt in the knuckle and the boss on the lower control arm. The poppet valves are adjusted to stop or reduce steering forces from the 1/8-inch (3 mm) specified distance between the lower control arm boss and the spacer. Figure 8.3 and Figure 8.4.

Turning Radius Angle

When turning, the inner wheel must turn at a greater angle than the outer wheel. This angle is the turning radius angle, often called the Ackerman angle. Figure 8.5.

Check the turning radius angle with the radius plates on the alignment equipment. To determine correct turning radius angle specification, refer to the vehicle manufacturer's manual.

- **If the angle is not within specifications:** Premature tire wear will occur. Inspect the knuckle, tie rod arms, tie rod ends and relay rod for wear or damage. Service as necessary.

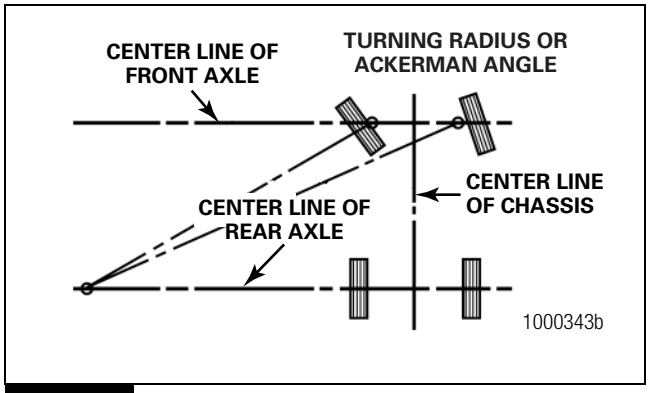

Figure 8.5

Measure and Adjust the Toe

Toe is the relationship of the distance between the front of the front tires and the rear of the front tires.

When the front distance is less than the rear distance, the wheels are "toed in." Toe-in is designed into the vehicle to counteract the tendency of the tires to toe-out when the vehicle is driven.

Incorrect toe will result in rapid tire wear.

1. Park the vehicle on a level surface. Block the wheels to prevent the vehicle from moving. Set the parking brake.

⚠ WARNING

Release all air from the air suspension system before you raise the vehicle or remove any components. Pressurized air can cause serious personal injury.

2. Use jacks to raise the vehicle so that the front tires are off the ground. Support the front axle with safety stands.
3. Use paint or chalk to mark the center area of both front tires around the complete outer surface of the tire.

4. Place the pointers of a trammel bar on the marks of each tire. Rotate the tires. Verify that a straight line is marked on the outer surface of the tire.
5. Place the trammel bar at the back of the tires. Raise the pointers so that the pointers are level with the spindles. Align the pointers with the marks on the tires. Measure and record the distance between the pointers.
6. Repeat Step 5 for the front of the tires. Figure 8.6.

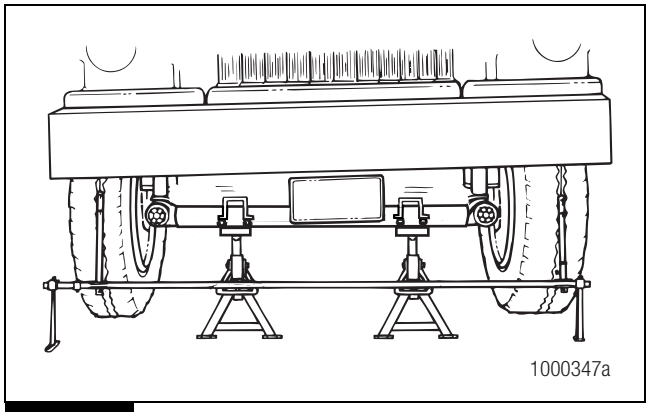

Figure 8.6

7. To obtain the toe measurement, subtract the distance reading between the front of the tires from the distance reading between the back of the tires. Figure 8.7.
   - **If the toe measurement is not 1/16-inch ± 1/16-inch (1.58 mm ± 1.58 mm) at 21.5-inches (546.1 mm) from the centerline of the suspension:** Use the following procedure to adjust the toe.

   A. Loosen the tube clamp nut and bolt on each end of the tie rod.

   B. Turn the adjusting sleeve until the specified toe distance is obtained.

   C. Verify that the tie rods are the correct length and within 1/8-inch (3 mm) of each other. The tie rod end and the adjusting sleeve must have the correct engagement with the tie rod. Figure 8.8.

   D. Tighten the tube clamp nut and bolt on each end of the cross tube to 130-150 lb-ft (176-203 N•m). Ensure that the tie rod is within the adjustment range. Figure 8.8. ⓣ

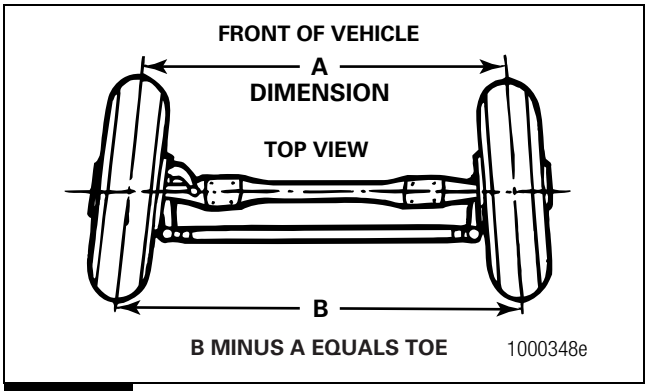

Figure 8.7

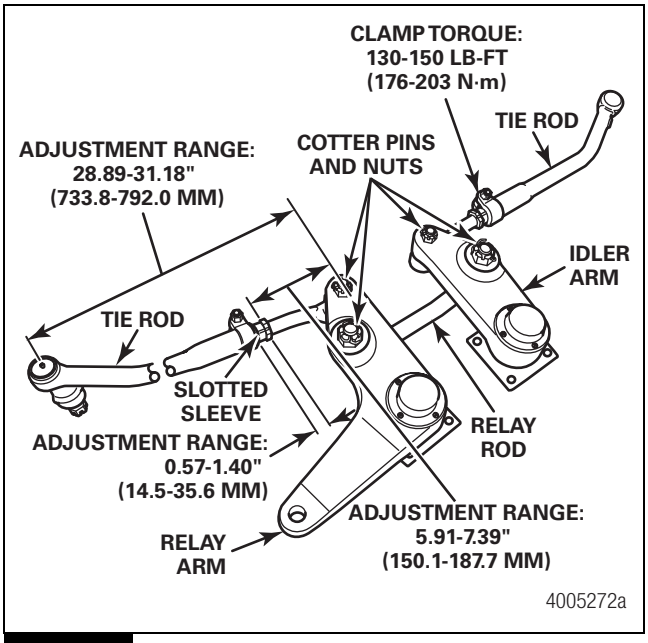

Figure 8.8

8. Repeat Steps 1-7 to check the toe dimension.

Table B: Tolerances and Limits

Description	Specification
Control Arm Ball Joint	65 mm ball joint: 0.059-inch (1.5 mm), 80 mm ball joint: 0.079-inch (2 mm) maximum axial free play
Hub Bearing End Play	0.001-0.005-inch (0.0254-0.127 mm)
Steering Relay Arm	No axial or radial free play allowed
Turn Angle	54 degrees maximum

Table C: Torque Values for Fasteners

		Torque Range	
Description	**Size**	**Lb-Ft**	**N•m**
Air Spring-to-Control Arm Mounting Capscrews	M14 x 2 x 40	96-100	130-135
Air Spring-to-Subframe Nuts	M12 x 1.75	69-87	94-118
Air Spring Adapters	M16 x 1.5 to 3/8-18 NPTF	30-33	40-44
Air Spring Plugs	M16 x 1.5	41-44	55-60
Lower Ball Joint	80 mm	1033-1106	1400-1500
Upper Ball Joint	65 mm	1033-1106	1400-1500
Lower Control Arm Ball Joint Stud-to-Knuckle Retaining Nuts	—	922-959	1250-1300
Upper Control Arm Ball Joint Stud-to-Knuckle Retaining Nuts	—	553-590	750-800
Control Arm Bar Pin-to-Subframe Mounting Capscrews	M18 x 2.5 x 60	225-273	305-370
	M20 x 2.5 x 60	369-480	500-650
Spindle Nuts	—	406-420	550-570
Spindle Nut Socket Head Capscrew	M8 x 1.25 x 20	22-26	30-35
Wheel Adapter Capscrews	M18 x 1.25 x 80	321-332	435-450
Brake Mounting Socket Head Capscrews	M20 x 1.5	402-494	545-670
Brake Mounting Hex Head Capscrews	M20 x 1.5	402-494	545-670
Shock Absorber Bracket Retaining Socket Head Capscrews	M16 x 2 x 60	180-188	245-255
Shock Absorber Locknuts	3/4″-10	270-350	366-474
Steering Arm Mounting Capscrews	M20 x 1.5 x 70	406-428	550-580
Steering Relay Arm and Idler Arm Cover Capscrews	M6 x 1.0 x 12	8-9	10-12
Steering Assembly-to-Frame Nuts	5/8″-11	180-210	244-285
Tie Rod Clamp Nuts	—	130-150	176-203
Ball Stud-to-Steering Arm Stud Nuts	—	245-260	332-353
Steering Stop Locknuts	—	103-111	140-150
Leveling Valve Bracket Capscrew	M8 x 1.25	18-26	25-35

Table D: Lubricants

Item	Lubricant Specification
Tie Rod Ends, Relay Arm Bearing, Idler Arm Bearing	Meritor Specification O-617-A or equivalent, Multi-Purpose Chassis Grease, 6% 12-hydroxy lithium stearate grease, NLGI Grade 1, preferred Meritor Specification O-617-B or equivalent, Multi-Purpose Chassis Grease, 8% 1-hydroxy lithium stearate grease, NLGI Grade 2, acceptable

Tool Drawings

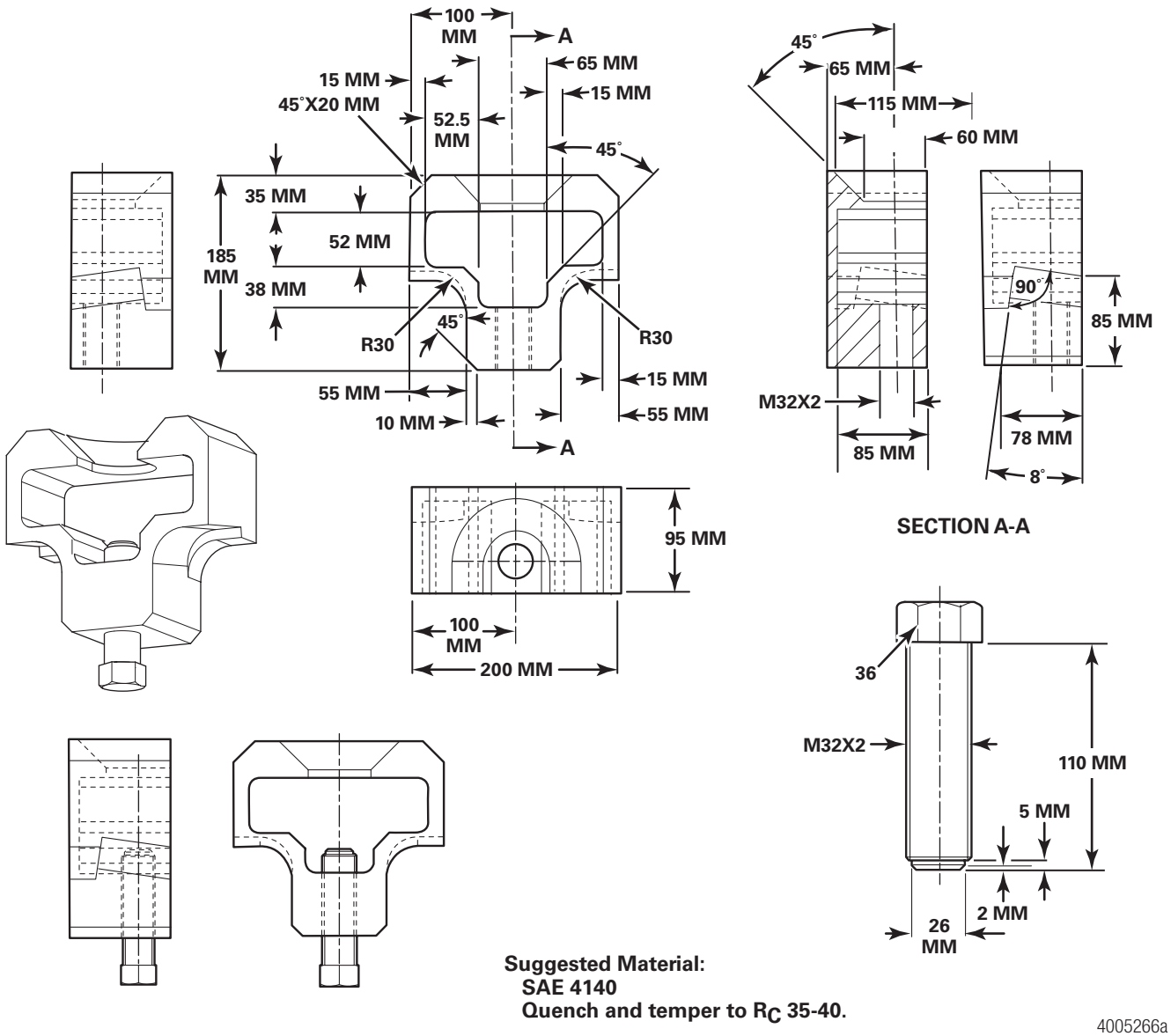

UPPER CONTROL ARM BALL JOINT REMOVAL TOOL

Figure 10.1

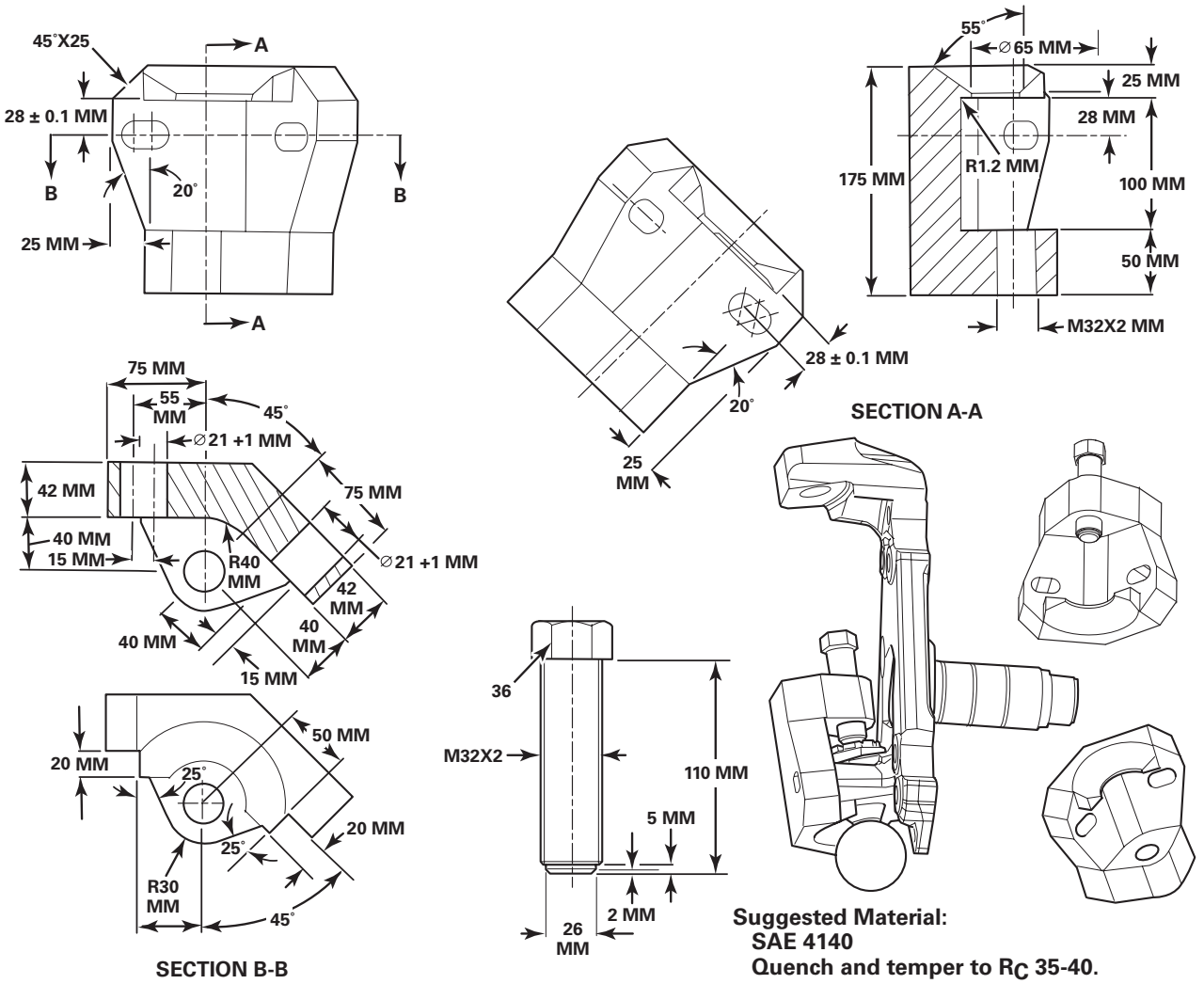

LOWER CONTROL ARM BALL JOINT REMOVAL TOOL

Figure 10.2

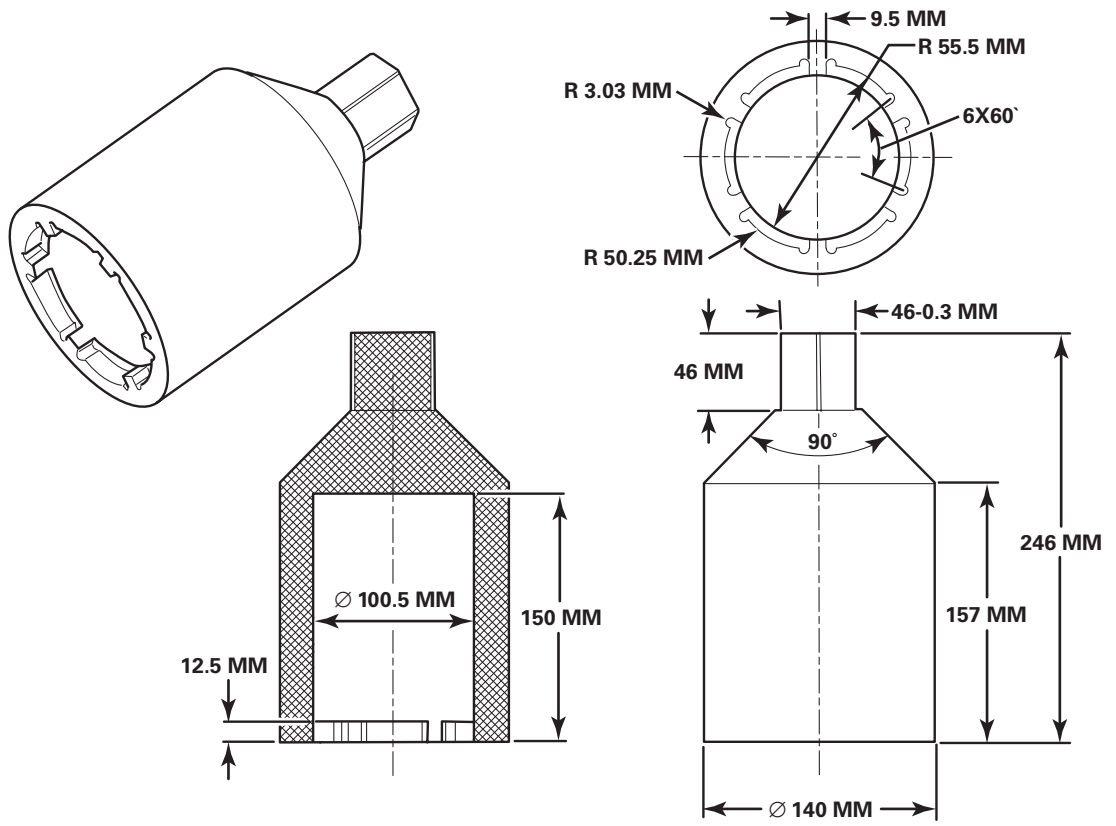

Suggested Material:
SAE 4140
Quench and temper to R_C 35-40.

4005274a

65 MM UPPER CONTROL ARM BALL JOINT REMOVAL AND INSTALLATION TOOL

Figure 10.3

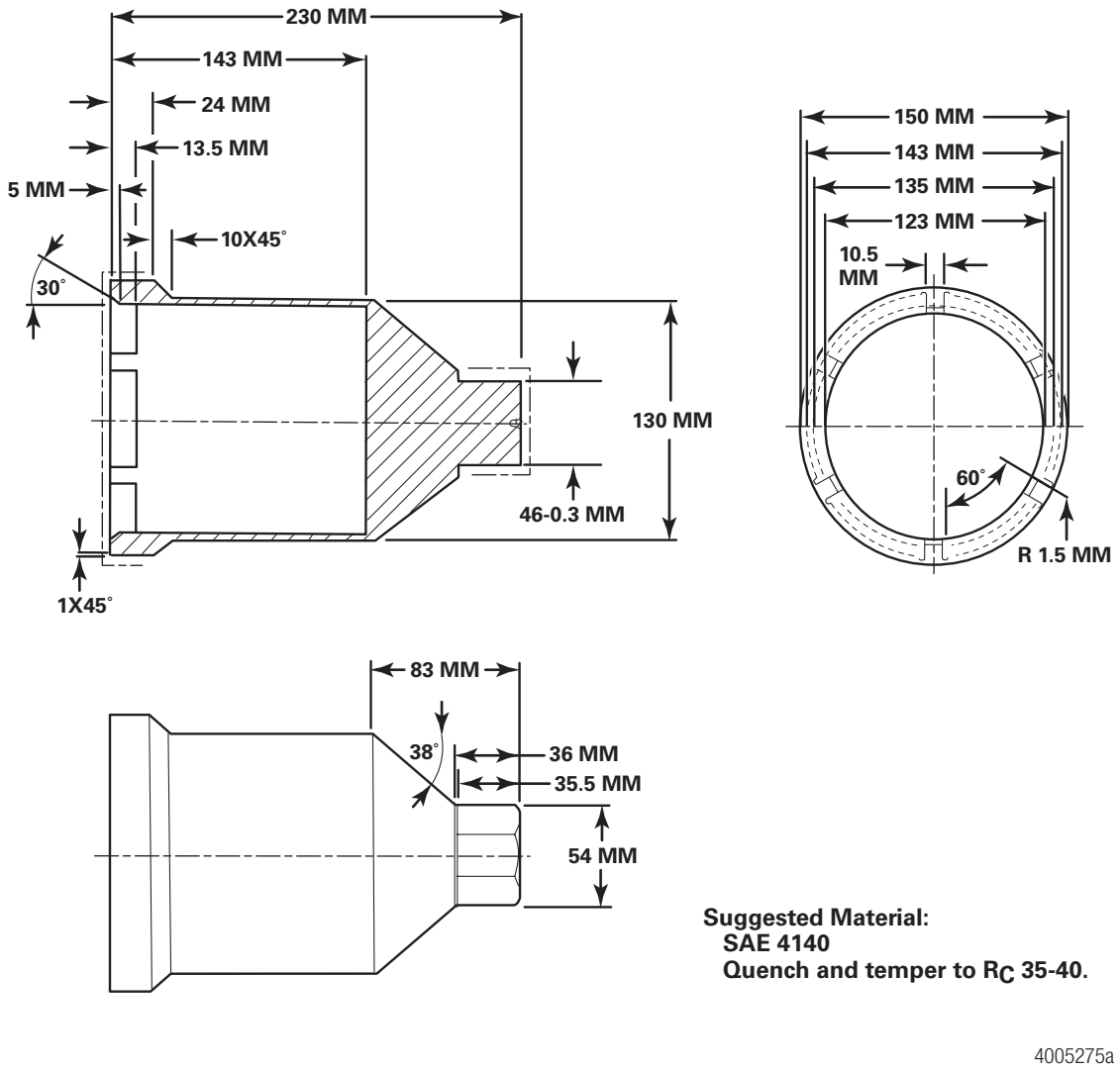

80 MM LOWER CONTROL ARM BALL JOINT REMOVAL AND INSTALLATION TOOL

Figure 10.4

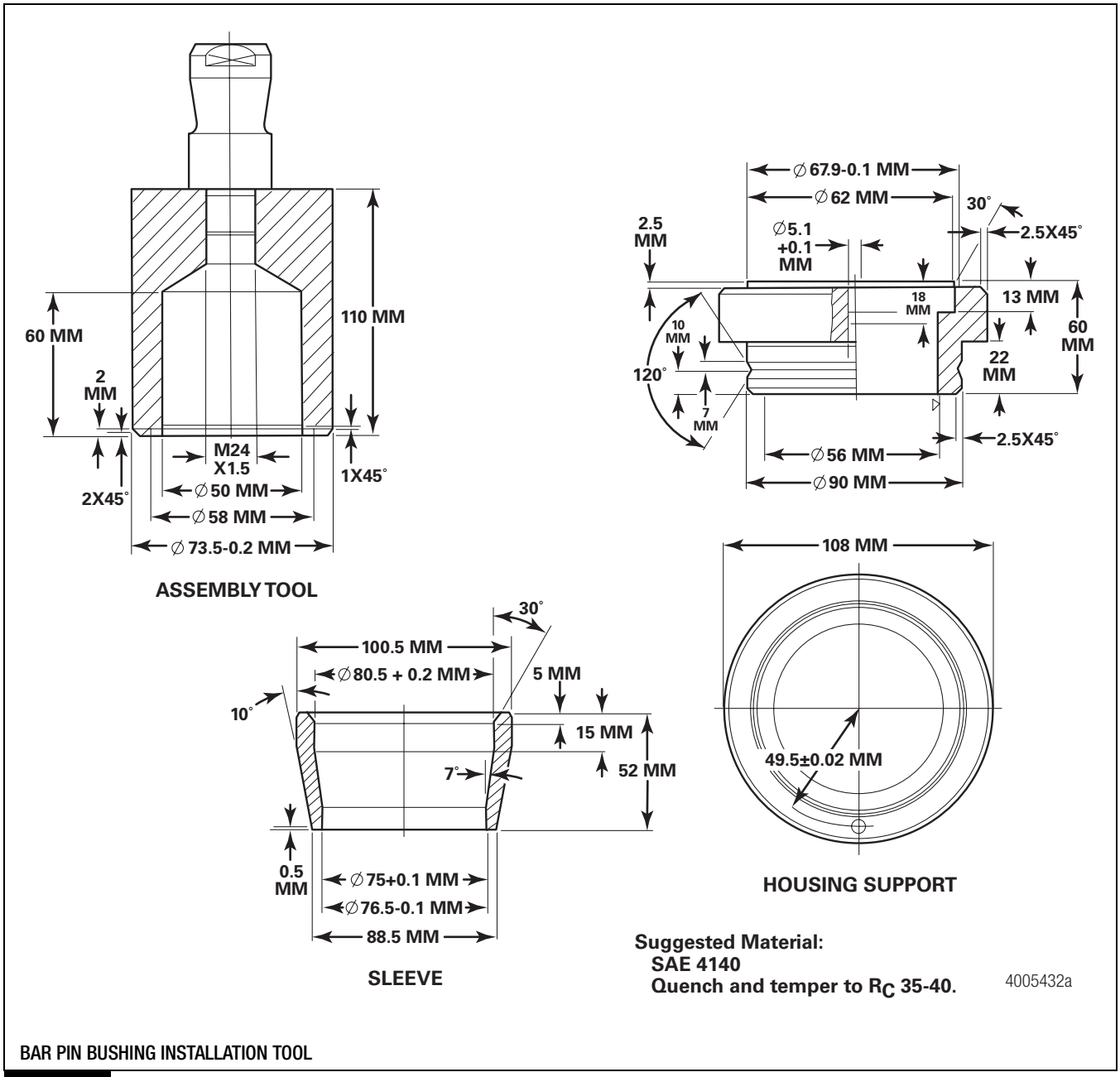

BAR PIN BUSHING INSTALLATION TOOL

Figure 10.5

Spanner Socket

The spanner socket for the relay arm and idler arm assemblies is available from the following.

- SKF, part number HN 8-9
- Snap-on®, part number 58695C

Meritor Heavy Vehicle Systems, LLC
2135 West Maple Road
Troy, MI 48084 USA
800-535-5560
meritor.com

Copyright 2005
Meritor, Inc.

Printed in USA

Issued 06-05
Maintenance Manual MM-0368 (16579/24240)

MERITOR®