MERITOR

Maintenance Manual 2

Front Non-Drive Steer Axles

All Meritor Conventional, Easy Steer Plus™ and MFS Series

Revised 02-26

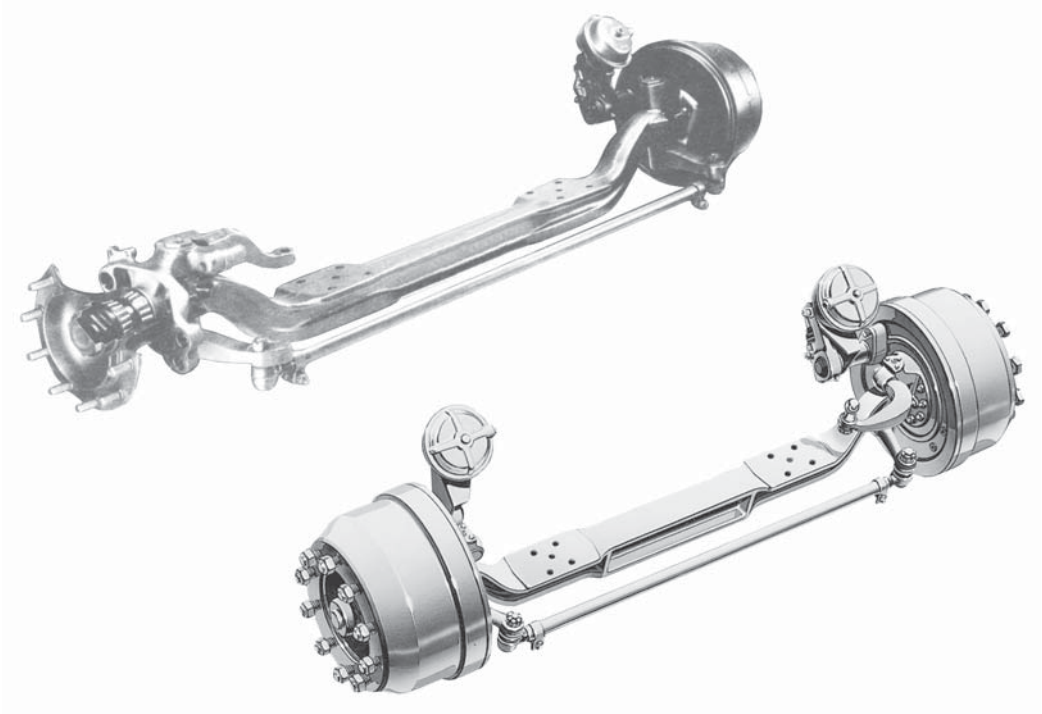

About This Manual

This manual provides maintenance and service information for the Meritor conventional, Easy Steer Plus™ and MFS Series front non-drive steer axles.

Before You Begin

1. Read and understand all instructions and procedures before you begin to service components.
2. Read and observe all hazard alert messages in this publication. They provide information that can help prevent serious personal injury, damage to components, or both.
3. Follow your company's maintenance and service, installation, and diagnostics guidelines.
4. Use special tools when required to help avoid serious personal injury and damage to components.

Hazard Alert Messages

⚠ DANGER

Indicates imminent danger. Failure to follow this instruction will result in death or serious injury.

⚠ WARNING

Indicates a possibly impending danger. Failure to follow this instruction can result in death or serious injury.

⚠ CAUTION

Indicates a hazardous situation or unsafe practice which, if not avoided, could result in injury or damage to components.

How to Obtain Additional Maintenance, Service and Product Information

Visit Literature on Demand on cummins.com to access and order additional information.

Contact the Meritor OnTrac™ Customer Service Center at 866-668-7221 (United States and Canada) between 7:30 AM and 10:00 PM ET Monday through Friday, and between 9:00 AM and 6:00 PM ET on Saturday; 001-800-889-1834 (Mexico); or visit our website: www.cummins.com/components/drivetrain-systems/warranty.

If Tools and Supplies are Specified in This Manual

Contact Meritor's Commercial Vehicle Aftermarket at 888-725-9355.

Tiger Tools. Call the company's customer service center at 800-661-4661, or visit their website at tigertool.com.

For Owatonna Tools, contact OTC Tool and Equipment Division, 655 Eisenhower Drive, Owatonna, Minnesota, 55060.

Great Lakes Tool Specialties, 8530 M-89, Richland, Michigan, 49083. Call the company's customer service center at 800-877-9618 or 616-629-9628.

For Snap-On® tools, contact your local Snap-On® dealer.

The Technology Maintenance Council (TMC) of the American Trucking Associations

For more information on total vehicle alignment, refer to Recommended Practice RP 642 included in the Recommended Practices Manual published by The Technology Maintenance Council (TMC) of the American Trucking Associations, Inc., 2200 Mill Road, Alexandria, Virginia, 22314. You can contact TMC at 800-838-1763 or visit their website at www.trucking.org.

Information contained in this publication was in effect at the time the publication was approved for printing and is subject to change without notice or liability. Meritor Heavy Vehicle Systems, LLC, reserves the right to revise the information presented or to discontinue the production of parts described at any time.

Contents

pg. **1** **Section 1: Exploded Views**
Exploded View
Axle with a Conventional Wheel End
3 MFS Axle with Bolt-On, Integrated Steering and Tie Rod Arm Assembly, and Conventional Wheel End
5 Axle with a Unitized Wheel End

7 **Section 2: Introduction**
Description
Tie Rod Arm, Knuckle and King Pin
Steering Knuckle
Steering Arms
8 Pitman Arm
Unitized Wheel End
Tie Rod Assembly
Cross Tube and Clamp Assembly
Tie Rod Ends
9 Identification

12 **Section 3: Inspection**
Inspection
Incompatibility of Wheel Separator Plates and Unitized Wheel Ends
13 Inspect Parts
Steering Knuckle Vertical End Play
15 Upper and Lower King Pin Bushings
16 Unitized Wheel Ends
19 Tie Rod and Cross Tube Assembly
22 Department of Transportation Roadside Tie Rod Assembly Replacement Criteria

23 **Section 4: Disassembly**
Removal
Wheel Ends
25 Drag Link
Steering Arm
26 Tie Rod Arms, Tie Rod Ends and Cross Tube
27 Draw Keys, King Pin Caps, King Pins and Steering Knuckle
30 King Pin Bushings

33 **Section 5: Prepare Parts for Assembly**
Replace
Worn or Damaged Parts
Clean, Dry and Inspect Parts
Ground or Polished Parts
Rough Parts
Dry Cleaned Parts
Prevent Corrosion on Cleaned Parts
34 Installation
New Fasteners with Pre-Applied Adhesive Patches
pg. 34 Original or Used Fasteners Using Meritor Specification 2297-C-7049 Liquid Adhesive, Loctite® 680 Adhesive or Equivalent
Check the Torque Values of Dri-Loc® Fasteners Not Requiring Removal
35 Inspection
Parts
38 Wheel Bearings
39 Tie Rod Grease Fittings

40 **Section 6: Assembly**
Installation
King Pin Bushings
42 Ream the King Pin Bushings
43 Inner Knuckle Bore King Pin Seals
44 Knuckle to the Axle Beam
47 Check Steer Knuckle Vertical End Play
49 Draw Key Lock Nuts
50 King Pin Caps
51 Steering Arm
52 Install the Tie Rod Ends Into the Cross Tube
53 Tie Rod Arms, Tie Rod Ends and Cross Tube Assembly
54 Cross Tube and Tie Rod Ends
55 Replace the Studs on a Unitized Wheel End
58 Unitized Wheel End
59 Hubcaps
61 Drag Link
Brake Components and Wheel Ends

62 **Section 7: Adjustment**
Inspection
Inspection Before Alignment
Alignment
Front Wheel Alignment
63 Check and Adjust
Wheel Bearings
65 Adjustment
Maximum Turn Angle
66 Turning Radius Angle
67 King Pin Inclination
Recommended Camber, Caster and Toe Specifications
Camber Angle
68 Caster Angle
Measure and Adjust the Toe

70 **Section 8: Troubleshooting**
Troubleshooting
Front Non-Drive Steer Axle Diagnostic Table

Contents

pg. **72** **Section 9: Lubrication and Maintenance**
Maintenance
73 Lubrication
Lubricant Specifications
Hazard Alert Messages
Lubrication
Tie Rod End
75 King Pins
76 Ball Studs on the Steering Arm and the Tie Rod Arm Ends
77 Grease-Lubricated Wheel Bearings
Oil-Lubricated Wheel Bearings
Maintenance
Tighten Draw Key Nuts
78 Check the Steering Arm Bolts

79 **Section 10: Specifications**
Torque Specifications
Front Non-Drive Axles with Conventional Wheel Ends
81 MFS Axles with Bolt-On, Integrated Steering and Tie Rod Arm Assemblies, and Conventional Wheel Ends
83 Front Non-Drive Axles with Unitized Wheel Ends

85 **Section 11: Special Tools**
Special Tools

Exploded View

Axle with a Conventional Wheel End

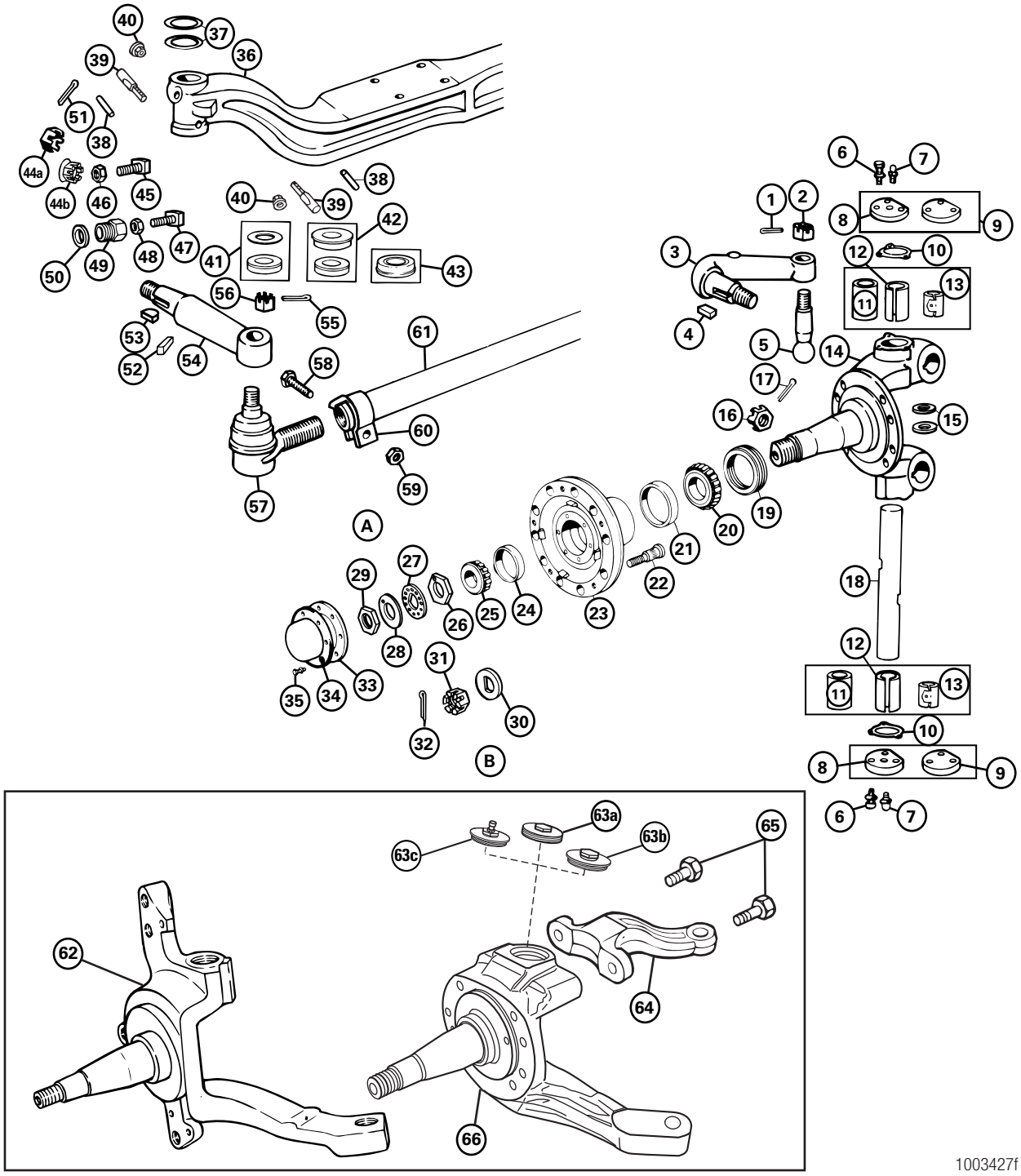

1003427f

1 Exploded Views

Item	Description
A	Double Nut
B	Single Nut
1	Cotter Pin
2	Drag Link-to-Steering Arm Castle Nut
3	Steering Arm
4	Key
5	Ball Stud
6	Capscrew and Washer
7	Grease Fitting
8	Greaseable Knuckle Cap
9	Sealed Knuckle Cap
10	Gasket
11	Easy Steer King Pin Bushing
12	Bronze King Pin Bushing
13	Nylon King Pin Bushing
14	Knuckle
15	King Pin Bushing Seal
16	Tie Rod Arm-to-Knuckle Castle Nut
17	Cotter Pin
18	King Pin
19	Hub Grease Seal
20	Inner Wheel Bearing Cone
21	Inner Wheel Bearing Cup
22	Stud
23	Hub
24	Outer Wheel Bearing Cup
25	Outer Wheel Bearing Cone
26	Adjusting Nut
27	Pierced Lock Ring
28	Lock Washer
29	Wheel Bearing Nut
30	“D” Washer
31	Adjusting Nut
32	Cotter Pin
33	Gasket
34	Hubcap

Item	Description
35	Capscrew and Washer
36	Axle Beam
37	Shims
38	Tapered Draw Key
39	Threaded Draw Key
40	Threaded Draw Key Nut
41	Thrust Bearing and Flat-Type Bearing Seal
42	Thrust Bearing and Cover-Type Bearing Seal
43	Integral Thrust Bearing and Oil Seal
44a	Steering Arm-to-Knuckle Castle Nut
44b	Steering Arm-to-Knuckle Castle Nut, Flared Base
45	3/4-Inch Stop Bolt
46	3/4-Inch Jam Nut
47	1/2-Inch Stop Bolt
48	1/2-Inch Jam Nut
49	3/4-Inch Adapter
50	Washer
51	Cotter Pin
52	Square Key
53	Woodruff Key
54	Knuckle Tie Rod Arm
55	Cotter Pin
56	Tie Rod Arm-to-Tie Rod End Castle Nut
57	Tie Rod End
58	Clamp Bolt
59	Clamp Lock Nut
60	Cross Tube Clamp
61	Cross Tube
62	Knuckle with Integral Tie Rod Arm and Torque Plate
63a	Old Style Threaded Knuckle Cap
63b	New Style Threaded Knuckle Cap
63c	Round Threaded Knuckle Cap
64	Bolt-On Steering Arm
65	Steering Arm Capscrew
66	Knuckle with Integral Tie Rod Arm

MFS Axle with Bolt-On, Integrated Steering and Tie Rod Arm Assembly, and Conventional Wheel End

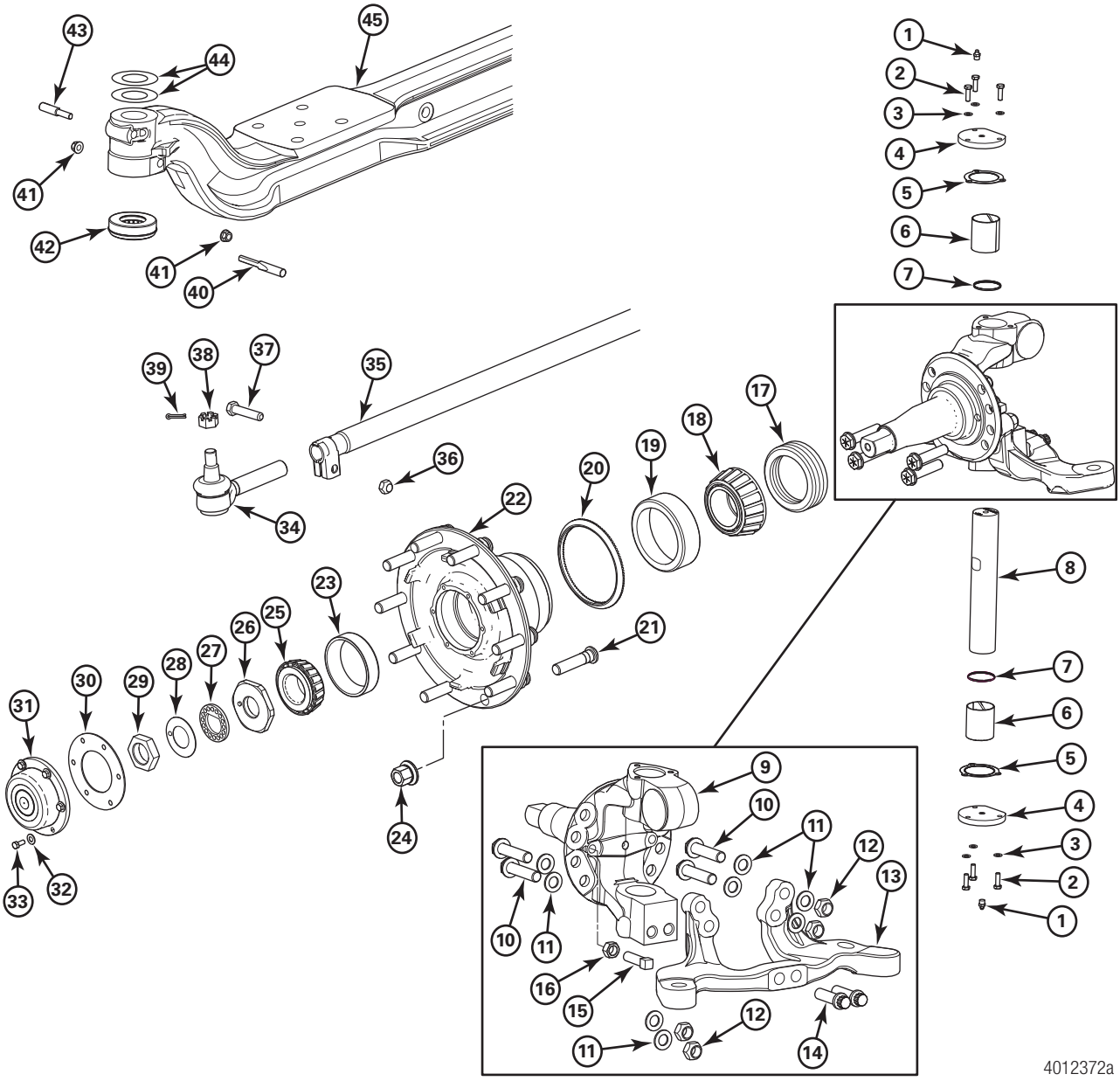

1 Exploded Views

Item	Description
1	Grease Fitting
2	Capscrew
3	Flat Washer
4	King Pin Cap
5	Gasket
6	Bushing
7	Seal Assembly
8	King Pin
9	Knuckle
10	Capscrew
11	Hardened Flat Washer
12	Locking Nut
13	Integrated Steering and Tie Rod Arm Assembly
14	12-Point Ferry-Head Bolt
15	Stop Screw
16	Jam Nut
17	Wheel Hub Seal
18	Inner Bearing Cone
19	Inner Bearing Cup
20	ABS Exciter Ring
21	Wheel Stud
22	Hub Assembly
23	Outer Bearing Cup
24	Wheel Nut
25	Outer Bearing Cone
26	Wheel Bearing Inner Nut
27	Lock Ring
28	Lock Washer
29	Wheel Bearing Outer Nut
30	Gasket
31	Hub Cap
32	Flat Washer
33	Capscrew
34	Tie Rod End
35	Tube Assembly

Item	Description
36	Tie Rod End Clamp Nut
37	Tie Rod End Clamp Bolt
38	Castle Nut
39	Cotter Pin
40	Lower Draw Key
41	Draw Key Nut
42	Thrust Bearing Assembly
43	Upper Draw Key
44	Shim
45	I-Beam Axle

Axle with a Unitized Wheel End

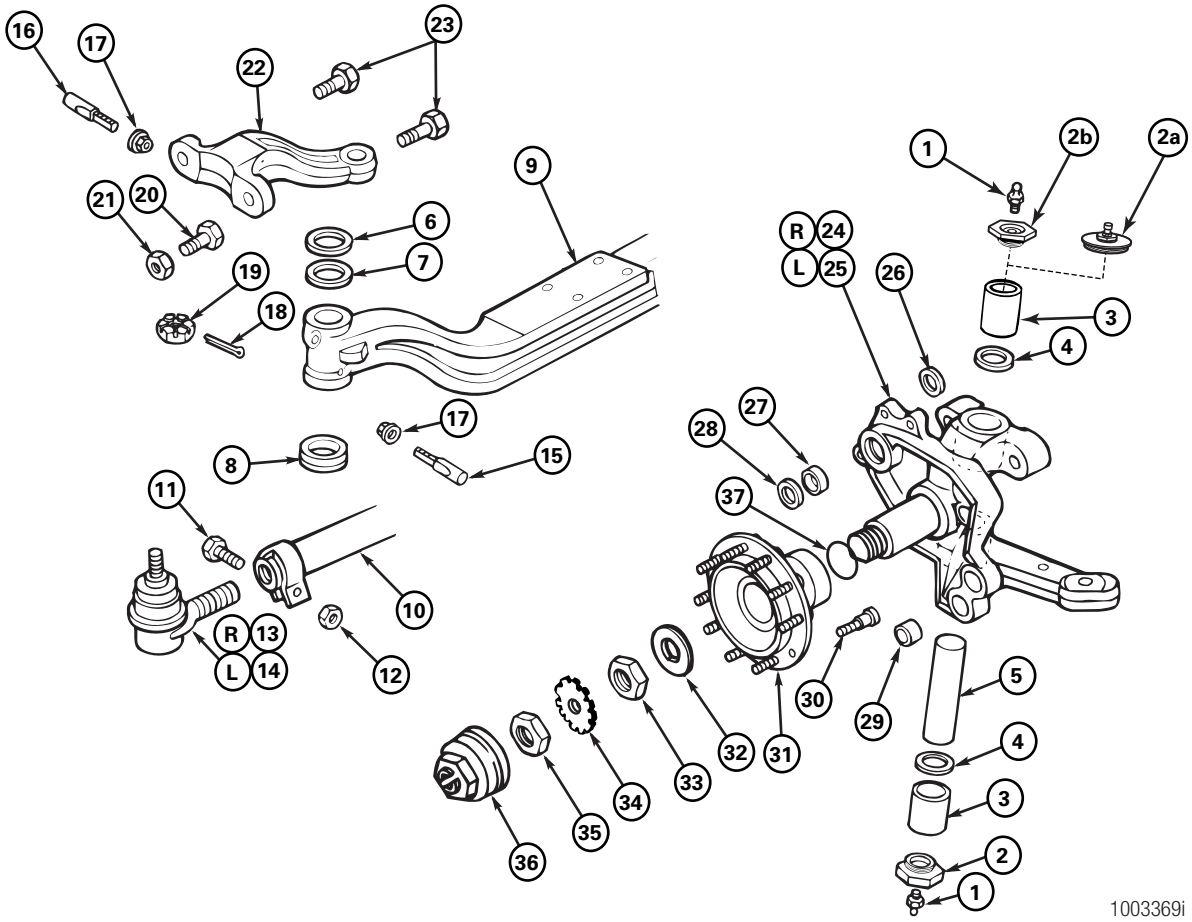

Item	Description	Item	Description
1	Grease Fitting	13	Cross Tube End, Right-Hand
2a	New, Round King Pin Cap	14	Cross Tube End, Left-Hand
2b	Old, Hexagon King Pin Cap	15	Lower Draw Key
3	King Pin Bushing	16	Upper Draw Key
4	King Pin Seal	17	Draw Key Nut
5	King Pin	18	Tie Rod End Nut Cotter Pin
6	0.10-Inch Shim	19	Cross Tube End Nut
7	0.05-Inch Shim	20	Stop Screw
8	Thrust Bearing and Seal Assembly	21	Stop Nut
9	Axle Center Beam	22	Steering Arm
10	Cross Tube Assembly	23	Steering Arm Capscrew
11	Cross Tube Clamp Bolt	24	Knuckle and Tie Rod Assembly, Right-Hand
12	Cross Tube Nut, Right-Hand	25	Knuckle and Tie Rod Assembly, Left-Hand

Item	Description
26	O-Ring
27	Bushing
28	Grease Seal Assembly
29	Bushing
30	Wheel Stud
31	Unitized Wheel End
32	Flat Thick Washer
33	Wheel Bearing Nut
34	Star/Lock Washer
35	Wheel Bearing Nut
36a	Threaded Hubcap
36b	Snap-Ring Hubcap
37	Spindle O-Ring

Description

The descriptions and procedures contained in this maintenance manual are applicable to all Meritor front non-drive steer axles.

Meritor front non-drive steer axles in this manual feature the following components. Figure 2.1, Figure 2.2 and Figure 2.3.

MFS axle models with bolt-on, integrated steering and tie rod arm assemblies are similar to axles with removable keyed steering and tie rod arms. Figure 2.2.

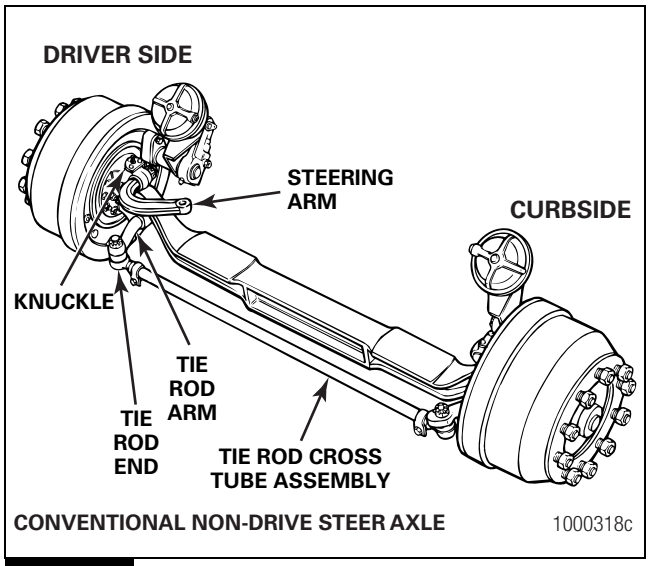

Figure 2.1

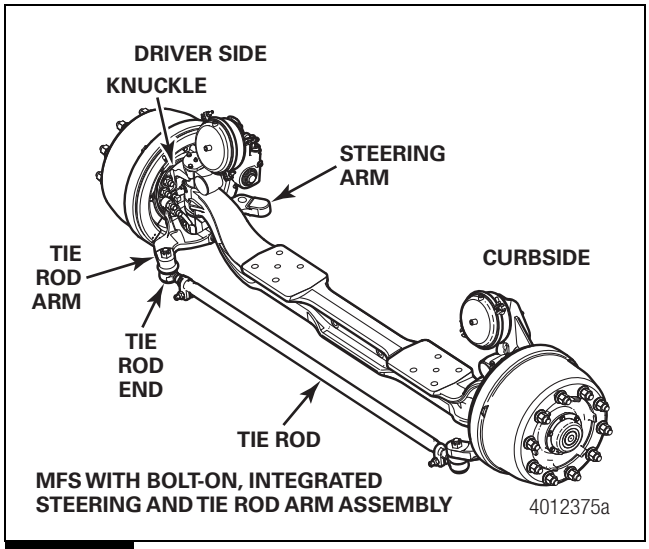

Figure 2.2

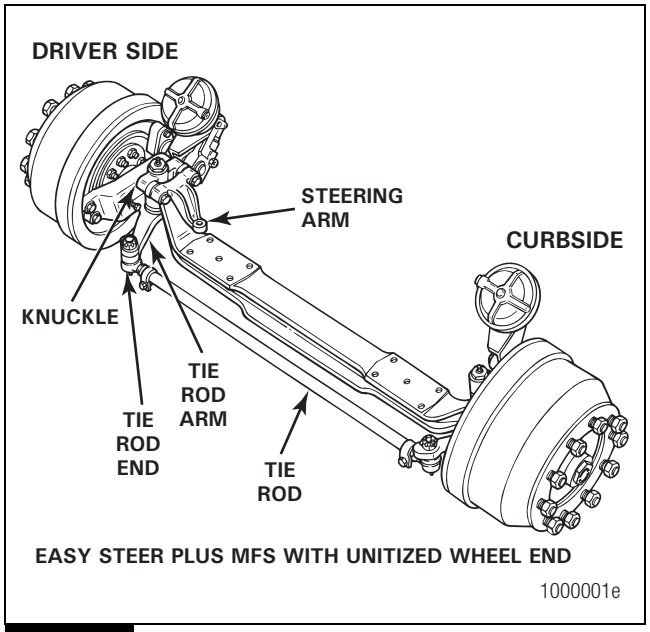

Figure 2.3

Tie Rod Arm, Knuckle and King Pin

The right tie rod arm is a mirror image of the left, and they are linked by the cross tube assembly. An integral tie rod design is used on Easy Steer Plus and MFS axles.

The right knuckle and king pin assembly is similar to the left, except that it does not have a steering arm attached to it as in a manual steering system.

A power steering system requires a steering arm in various applications for attachment of the auxiliary assist cylinder to the right knuckle.

Steering Knuckle

Steering knuckles are rated according to the capacity of the front axle. All models use straight king pins. Three types of king pin bushings are used: nylon, bronze and Easy Steer.

The brake spider has been combined into the knuckle of the Easy Steer Plus axle.

Steering Arms

The steering arm, which can be either a forged or cast component, converts the drag link force into a turning movement through the left king pin and the knuckle. Bolt-on steering arms are used on Easy Steer Plus and MFS axles.

Pitman Arm

The Pitman arm converts the output torque from the steering gear into the control force applied to the drag link. This linkage component connects the steering gear to the linkage at the center link end.

Unitized Wheel End

NOTE: A unitized wheel end has no user-serviceable parts. Figure 2.2.

Unitized wheel ends are enclosed units with bearings lubricated for the life of the entire component. This is an alternative to conventional wheel ends. Refer to Table A for a list of Meritor axle models equipped with unitized wheel ends.

Table A: Meritor Axle Models Equipped with Unitized Wheel Ends

MFS-10-143D-N	MFS-13-153D-N	FF-983
MFS-10-144D-N	MFS-13-144D-N	FF-984
MFS-12-122D-N	FF-981	FF-986
MFS-12-143D-N	FF-982	FF-987
MFS-12-144D-N		

A unitized wheel end has “half moons” embossed on the center of the hubcap. Figure 2.4.

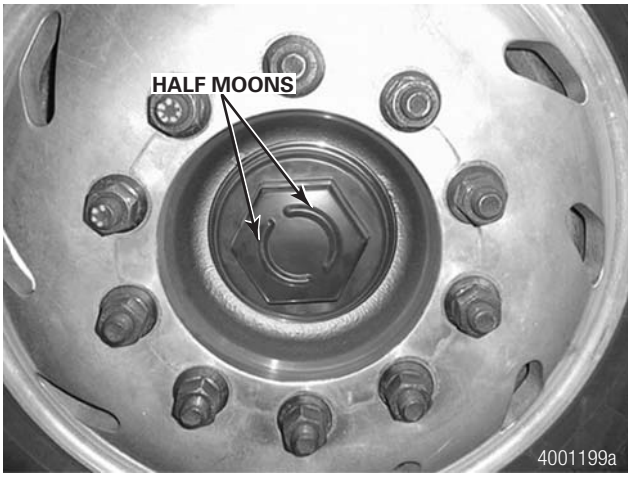

Figure 2.4

If the hubcaps are missing, you can use the axle model number to determine if the axle is equipped with unitized wheel ends. To identify the model number, refer to the axle identification plate on the front of the beam. Figure 2.6.

A unitized wheel end also has been referred to as a truck hub unit, Easy Steer Plus and a unitized hub.

Tie Rod Assembly

Forged or cast tie rod assemblies are used on Meritor front non-drive steer axles. The tie rod assembly links both steering knuckles for uniform movement and maintains steering control.

Cross Tube and Clamp Assembly

The cross tube and clamp assembly runs approximately parallel to the front axle. The cross tube has right-hand and left-hand threads on the appropriate side of the vehicle. Tie rod clamps secure the tie rod ends into the cross tube.

Tie Rod Ends

The tie rod ends include a ball joint and boot which thread into the cross tube. Depending on the manufacturer’s design, tie rod ends can be greaseable or non-greaseable.

Tie rod ends are either right-hand or left-hand threaded and correspond to the inside threads at each end of the cross tube. Figure 2.5.

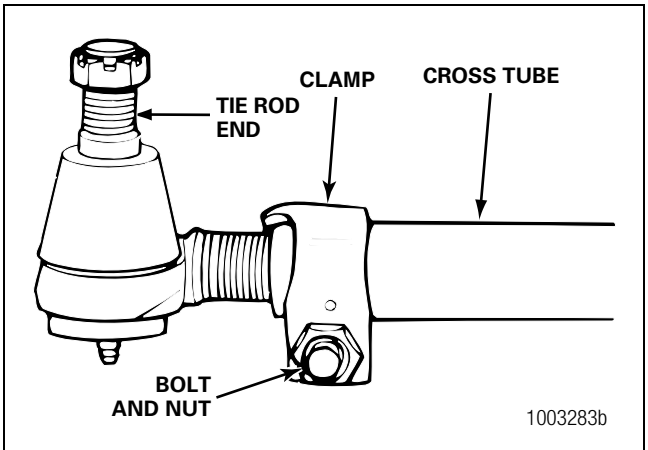

Figure 2.5

Identification

The axle build information and assembly date for Meritor front non-drive steer axles is on the axle identification tag. Figure 2.6.

The identification tag is fastened to the front face surface of the beam. The axle assembly date is located in either the lower right-hand or left-hand corner of the tag.

The Julian method is used to indicate the axle assembly date and is shown in Figure 2.6. The first two digits indicate the year, and the last three digits indicate the day of the year.

In the following example, 01 is the year 2001 and 327 refers to November 22.

To identify the model number, refer to the identification plate on the front of the beam. Use the complete model number to obtain parts.

Refer to Figure 2.7 for an explanation of non-MFS model numbers. Refer to Figure 2.8 for an explanation of MFS model numbers.

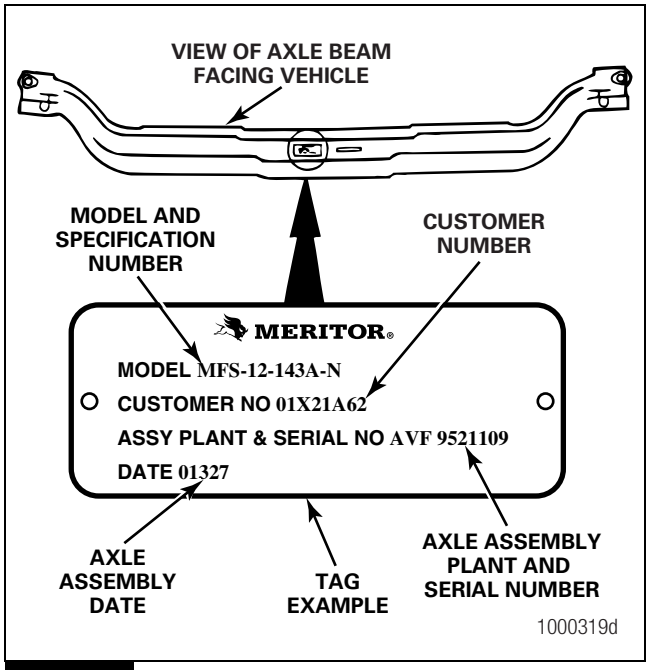

Figure 2.6

BRAKE TYPE

CA	=	Dura-Master® Air Disc Brake
L	=	Q+ Cam Brake
N	=	None
P	=	Cam-Master® "P" Series Cam Brake
Q	=	Cam-Master® "Q" Series Cam Brake
T	=	Cam-Master® "T" Series Cam Brake
W	=	Cam-Master® "W" Series Cam Brake
Z	=	Non-Meritor Brake
RDA	=	Stopmaster® Wedge Brake (Dual Air Chambers)
RSA	=	Stopmaster® Wedge Brake (Single Air Chamber)
RDH	=	Stopmaster® Wedge Brake (Dual Hydraulic Cylinders)
RSH	=	Stopmaster® Wedge Brake (Single Hydraulic Cylinder)

BASIC CAPACITY

C =	7,000-8,000 lbs.	(3175-3629 kg)
D =	10,000 lbs.	(4536 kg)
F =	12,000-13,200 lbs.	(5443-5987 kg)
G =	14,600 lbs.	(6623 kg)
L =	16,000-20,000 lbs.	(7258-9072 kg)

Fx - xxx - xx - xxx

FF - 961 - LX - 221

FRONT AXLE

SPECIFICATION NUMBER

BASIC SERIES

MAJOR VARIATION

0 = Pre-FMVSS-121 Design
1 = Straight Sealed King Pin and New Tie Rod Assembly
2 = Sealed King Pin Construction
3 = Larger Axle Beam and Knuckles
4 = Easy Steer® Design
5 = Tubular Axle Beam
6 = Lightweight Axle Beam
7 = Center-Point™ Design
8 = Easy Steer Plus™ Unitized Axle Design
9 = Needle Bearings

NUMBER DESIGN VARIATION

0 = Tapered King Pin
1 = Straight King Pin
2 = Special Tie Rods
3 = 5-Inch Drop from Center of Spindle to Pad
4 = 5-Inch Drop from Center of Spindle to Pad and Special Tie Rods
5 = Special Wheel-Ends
6 = Double Drop Beam — 12,000 lbs. GAW
7 = Double Drop Beam — 13,200 lbs. GAW

4005492a

Figure 2.7

Hub, Tie Rod Arm, Brake Attachment Variation
A = Conventional, Non-Integral Tie Rod Arm, Non-Integral Brake
B = Conventional, Integral Tie Rod Arm, Non-Integral Brake
C = Conventional, Integral Tie Rod Arm, Integral Disc Brake
D = Unitized 65 mm, Integral Tie Rod Arm, Integral Drum Brake
E = Conventional, Integral Tie Rod Arm, Integral Drum Brake
F = Unitized 60 mm, Non-Integral Tie Rod Arm, Non-Integral Brake
G = Unitized 60 mm, Integral Tie Rod Arm, Integral Drum Brake
H = Unitized 60 mm, Integral Tie Rod Arm, Integral Disc Brake
J = Unitized 70 mm, Integral Tie Rod Arm, Non-Integral Brake

KPI	in.	(mm)	Drop in.	(mm)	KPI	in.	(mm)	Drop in.	(mm)
10 =	67.5	(1714.5)	2.8	(71.1)	51 =	72.0	(1828.8)	3.3	(83.8)
11 =	68.0	(1727.2)	2.64	(67.1)	53 =	72.0	(1828.8)	3.7	(95.0)
13 =	68.0	(1727.2)	3.7	(95.0)	55 =	75.8	(1924.1)	6.5	(165.1)
16 =	68.0	(1727.2)	3.6	(91.4)	60 =	60.0	(1524.0)	2.5	(63.5)
21 =	69.0	(1752.6)	3.3	(83.8)	61 =	60.0	(1524.0)	2.8	(71.1)
22 =	69.0	(1752.6)	3.5	(88.9)	62 =	65.2	(1657.1)	3.7	(95.0)
23 =	69.0	(1752.6)	3.5/2.0	(88.9/50.8)	63 =	65.3	(1657.4)	3.7	(95.0)
24 =	69.0	(1752.6)	5.0	(127.0)	67 =	74.5	(1892.3)	8.0	(203.2)
30 =	70.4	(1788.2)	10.2	(258.1)	70 =	74.5	(1892.3)	3.6	(91.4)
32 =	71.0	(1803.4)	3.5	(88.9)	75 =	80.0	(2032.0)	2.5	(63.5)
33 =	71.0	(1803.4)	3.7	(95.0)	85 =	67.5	(1714.5)	2.5	(63.5)
35 =	71.0	(1803.4)	5.0	(127.0)	86 =	67.5	(1714.5)	3.6	(91.4)
40 =	71.5	(1816.1)	4.7	(118.1)	92 =	68.5	(1739.9)	3.5	(88.9)
42 =	71.5	(1816.1)	3.5	(88.9)	93 =	68.5	(1739.9)	4.76	(120.9)
43 =	71.5	(1816.1)	3.7	(95.0)	94 =	68.83	(1748.3)	5.0	(127.0)
44 =	71.5	(1816.1)	5.0	(127.0)					

Manufacturing Location
N = N.A.
S = S.A.
E = Europe
A = Australia/Asia
M = Mysore, India – J.V.

X = 00's of pounds (If omitted, default is **0**)
A = 100 F = 600
B = 200 G = 700
C = 300 H = 800
D = 400 J = 900
E = 500

M F S - xxx - x x x x - x x - xxx

M F S - 1 2 - 1 2 2 A - N L - 1

M = Meritor

F = Front

S = Non-Drive Steer Axle

GAWR
xx = Typical GAWR* in 000's of pounds (dependent on unit identifier)

Axle Spec. Number

Beam, King Pin, Bushing Variation
1 = Forged I-Beam, Straight King Pins — Non-Metallic Bushings
2 = Forged I-Beam, Tapered King Pins — Needle Bearings
4 = Forged I-Beam, Straight King Pins — Bronze Bushings
5 = Forged I-Beam, Straight King Pins — Needle Bearings
6 = Formed Beam, Straight King Pins — Non-Metallic Bushings

Brake Type
B = "B" Frame Brake
C = Air Disc Brake
D = Wedge Brake (Dual Air Chambers)
E = Wedge Brake (Dual Hydraulic Cylinders)
F = Wedge Brake (Single Hydraulic Cylinder)
G = DuraPark® Hydraulic Drum
H = Quadraulic™ Disc
K = EX+™ Air Disc
L = Q+™ Cam Brake
N = None
P = "P" Series Cam Brake
Q = "Q" Series Cam Brake
R = Cast+ ™ Brake
S = Wedge Brake (Single Air Chamber)
T = "T" Series Cam Brake
V = Simplex Air Cam Brake
W = "W" Series Cam Brake
Z = Non-Meritor Brake

*For actual GAWR, consult application approval for the axle specification.

1003426k

Figure 2.8

Hazard Alert Messages

Read and observe all hazard alert messages in this publication.

⚠ DANGER

Park the vehicle on a level surface. Block the wheels to prevent the vehicle from moving. Support the vehicle with safety stands. NEVER work under a vehicle supported only by jacks. Jacks can slip and fall over. Failure to use safety stands can result in death or serious personal injury and damage to components.

⚠ DANGER

Replace damaged or out-of-specification axle components. NEVER bend, repair or recondition axle components by welding or heat-treating. A bent axle beam reduces axle strength, affects vehicle operation and voids Meritor's warranty. Death or serious personal injury can result.

⚠ WARNING

To prevent eye injury, always wear eye protection when performing vehicle maintenance or service.

Before inspecting axle components, verify that the correct tools are available. Using the correct tools will ensure safety and provide the most accurate results.

- Dial indicator
- Tire blocks
- Jack
- Safety stands
- Pry bar
- Torque wrench

Inspection

Incompatibility of Wheel Separator Plates and Unitized Wheel Ends

Meritor has determined that wheel separator plates are incompatible with the SKF Phase IV unitized wheel end on some front axle assemblies. Vehicles with wheel mounting flanges of 0.437-inch (11.1 mm) or less and brake drum mounting flanges of 0.25-inch (6.4 mm) or less assembled between September 1996 and March 1998 are affected.

⚠ DANGER

Do not use wheel separate plates on affected SKF Phase IV unitized wheel ends. Use of plates potentially reduces the service life of the hub, which could result in an SKF hub flange fracture. If a hub flange fractures, vehicle control, braking and stability can be affected, and the wheel may separate from the vehicle. Death or serious personal injury can result.

Meritor has determined that the use of plates in the above combination, and time frame, potentially reduces the service life of the hub, which could result in an SKF hub flange fracture. If a hub flange fractures, vehicle control, braking and stability are affected, and the wheel may separate from the vehicle.

Meritor has further determined that vehicles equipped with other wheel-end configurations not defined above, are not affected by the use of wheel separator plates if correctly installed and maintained. Also, Meritor has determined that FF-980 Series front axle assemblies installed into vehicles after April 1998 can be used with any wheel-end configuration and wheel separator plates, when correctly installed and maintained.

A wheel separator plate is a 0.040-inch (1.016 mm) plastic spacer, which some vehicle users install between the wheel and the brake drum onto front axle assemblies.

Wheel separator plates are intended to protect the wheels from corrosion and fretting fatigue.

Recommendation

Meritor believes that the wheel attachment clamp joint must be carefully maintained with:

- Correct hardware.
- Clean, flat, uncontaminated mounting surfaces.
- Correct nut torquing and retorquing practices.

Meritor believes that installing a wheel separator plate may make it more difficult to ensure correct wheel clamp with use over time. Refer to the wheel separator plate manufacturer's recommended wheel stud nut torque maintenance practices.

Meritor further believes that the use of more than one wheel separator plate in a wheel end is inappropriate and that a wheel separator plate should never be installed between the hub and the drum. This practice is expressly prohibited with Meritor axle models MFS-12, FF-981, FF-982, FF-983, FF-984, FF-986 and FF-987.

Therefore, Meritor recommends that vehicle owners who install and use wheel separator plates should also increase the frequency of their wheel-end maintenance, consistent with wheel separator plate manufacturer's recommended practices, so they are confident that the intended wheel attachment clamp integrity is maintained.

In addition, Meritor recommends that the users of wheel separator plates should contact the wheel separator plate manufacturers to obtain recommendations and approval for any special application or more demanding environments (i.e., use at elevated temperature ranges or frequent stop-start cycling) which may also potentially affect the integrity of the wheel attachment system.

Inspect Parts

Fasteners

1. Verify that all fasteners are tightened to the specified torque.
2. Use a torque wrench to check the torque. As soon as the fastener starts to move, record the torque. Correct if necessary.
3. Replace any worn or damaged fasteners.

Wear and Damage

Inspect the parts of the axle for wear and damage. Look for bent or cracked parts. Replace all worn or damaged parts.

Pivot Points

Verify that pivot points are not loose. Verify that the pivot points are lubricated.

Operation

Verify that all the parts move smoothly through the complete turning radius.

Tire Wear

Inspect the tires for wear patterns that indicate suspension damage or misalignment. Correct if necessary.

Steering Arm Bolts

Check the torque on all bolt-on steering arm bolts every 200,000 miles (320 000 km). Refer to Section 9.

Draw Key Nuts

On axles with either conventional or unitized wheel ends, tighten the draw key nuts to 30-45 lb-ft (41-61 N•m) at the following intervals. Figure 3.1.

- After the first 6,000 miles (10 000 km) of new vehicle operation
- Every 36,000 miles (58 000 km) of operation

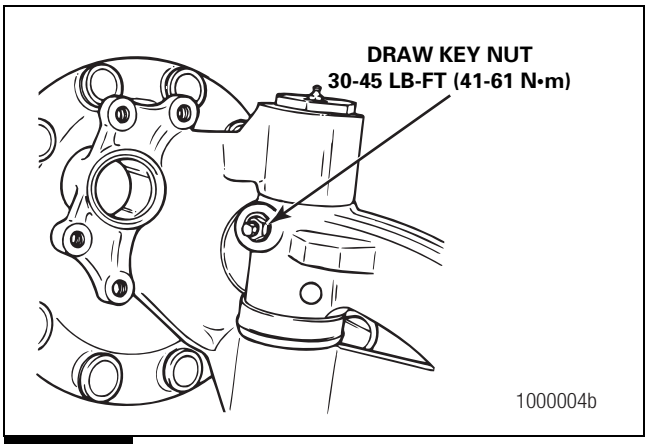

Figure 3.1

Steering Knuckle Vertical End Play

Table B: End Play Specifications

Axle	Specification
In-Service Axles	0.030-Inch (0.762 mm) Max.

Axles with Conventional Wheel Ends

1. Park the vehicle on a level surface. Block the wheels to prevent the vehicle from moving. Set the parking brake.
2. Use a jack to raise the vehicle until the front wheels are off the ground. Support the front axle with safety stands.
3. Install a dial indicator with the base on the I-beam and the tip on the top knuckle cap. Figure 3.2.

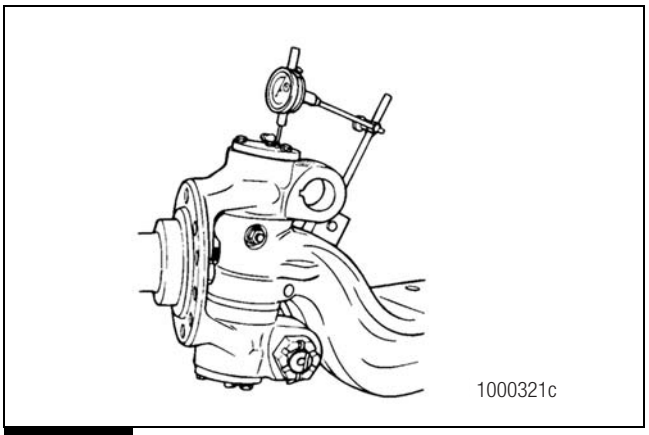

Figure 3.2

4. Place a pry bar between the boss for the tie rod arm and the I-beam. Push the knuckle to the BOTTOM of vertical travel. Figure 3.3.

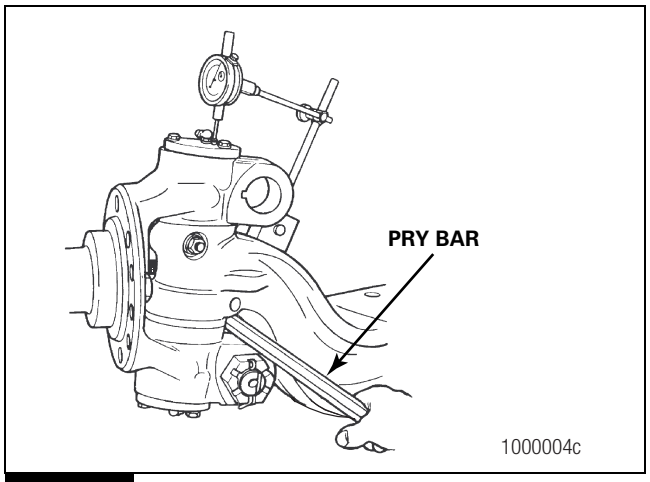

Figure 3.3

5. Set the dial indicator on ZERO.
6. Use the pry bar to push the knuckle UPWARD. Record the reading on the dial indicator.
   - **If the reading is ZERO:** Remove the knuckle. Refer to Section 4. Remove the shims from the shim pack. Refer to Section 6.
   - **If the reading is more than the correct end play specifications in Table B:** Remove the knuckle. Refer to Section 4. Add shims to the shim pack. Refer to Section 6.

Axles with Unitized Wheel Ends

1. Park the vehicle on a level surface. Block the wheels to prevent the vehicle from moving. Set the parking brake.
2. Use a jack to raise the vehicle until the front wheels are off the ground. Support the front axle with safety stands.
3. Turn the wheels STRAIGHT ahead.
4. Install a dial indicator for each side of the axle beam.
   - **For a curbside knuckle:** Install a dial indicator with the base on the axle beam. Place the dial indicator tip onto the upper king pin cap.
   - **For a driver side knuckle:** Remove the king pin cap. Install a dial indicator with the base on the steering arm. Place the dial indicator tip onto the exposed king pin top.
5. Set the dial indicator to ZERO.
6. Raise the jack until you start to lift the axle beam off the safety stands. Measure and record the dial indicator reading.
7. Lower the jack.
8. Place a jack and a wood block, with a hole that allows clearance for the lower king pin grease fitting, under the lower king pin cap area. Figure 3.4.

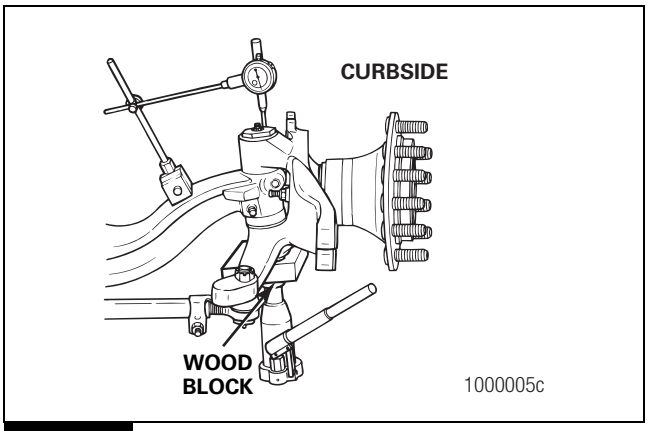

Figure 3.4

9. Compare the reading you obtained with the correct end play specifications in Table B.
   - **If the reading is ZERO:** Remove the knuckle. Refer to Section 4. Remove shims from the shim pack. Refer to Section 6.
   - **If the reading is more than the correct end play specifications in Table B:** Remove the knuckle. Refer to Section 4. Add shims to the shim pack. Refer to Section 6.

Alternate Method to Measure End Play on Axles with Unitized Wheel Ends

1. Turn the wheels to the RIGHT for a curbside knuckle or LEFT for a driver-side knuckle measurement.
2. Place a pry bar between the tie rod arm and the axle beam. Figure 3.5.

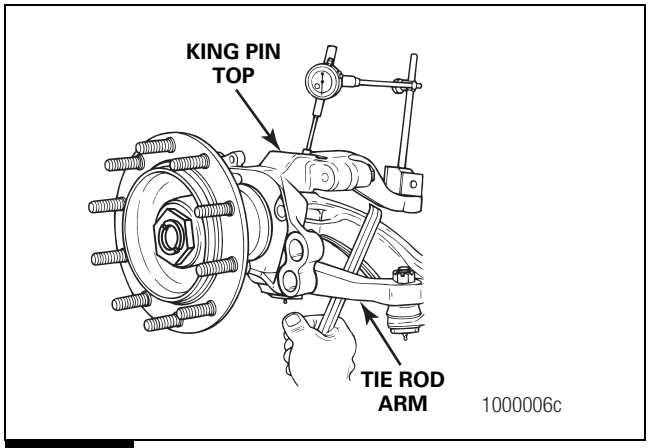

Figure 3.5

3. Set the dial indicator to ZERO.
4. Lift the knuckle UPWARD using a pry bar. Record the reading on the dial indicator.
5. Compare the reading you obtained with the correct end play specifications in Table B.
   - **If the reading is ZERO:** Remove the knuckle. Refer to Section 4. Remove shims from the shim pack. Refer to Section 6.
   - **If the reading is more than the correct end play specifications in Table B:** Remove the knuckle. Refer to Section 4. Add shims to the shim pack. Refer to Section 6.

Upper and Lower King Pin Bushings

Wheel-to-Hub Mounting

To help determine the cause of movement and looseness, first check the wheel-to-hub mounting.

1. Verify that the wheel is mounted correctly and all wheel-end fasteners and hardware are tightened to the correct specification.
2. Apply the service brake to lock the hub and spindle together.
   - **If movement is detected:** The king pin or king pin bushings should be inspected. Refer to the procedure below.
   - **If applying the service brake eliminates the movement:** Proceed to Unitized Wheel Ends, Detailed Inspection in this section to determine the unitized wheel-end hub end play.

Axles with Conventional and Unitized Wheel Ends

1. Park the vehicle on a level surface. Block the wheels to prevent the vehicle from moving. Set the parking brake.
2. Use a jack to raise the vehicle until the wheels are off the ground. Support the vehicle with safety stands.
3. Check the upper king pin bushing for wear. Install a dial indicator with the base on the I-beam and the tip against the side of the top of the knuckle. Figure 3.6 and Figure 3.7.

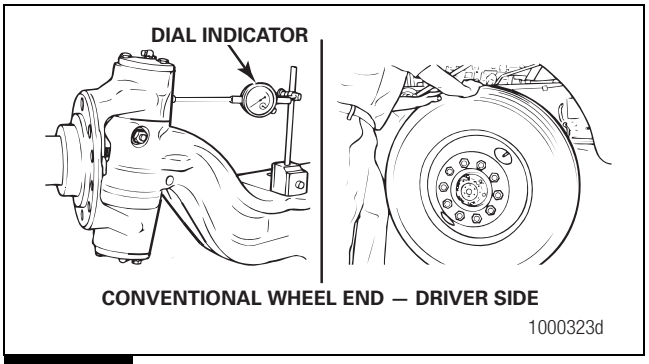

Figure 3.6

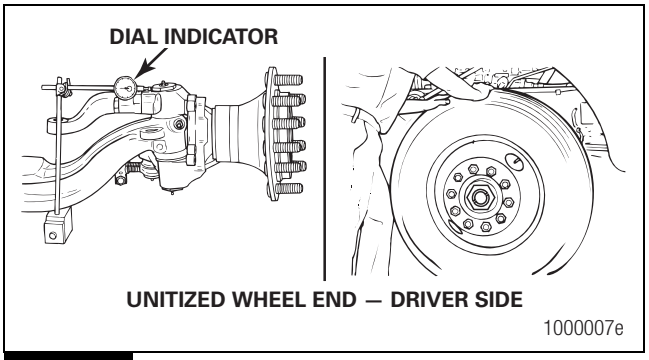

Figure 3.7

4. Set the dial indicator to ZERO.
5. Move the top of the tire side-to-side TOWARD and AWAY from the vehicle.
   - **If the dial indicator moves a total of 0.015-inch (0.381 mm):** The upper bushing is worn or damaged. Replace both bushings in the knuckle. Refer to Section 4, Section 5 and Section 6. Figure 3.6 and Figure 3.7.
6. Check the lower king pin bushing. Install a dial indicator so that the base is on the I-beam and that the tip is against the side of the bottom of the knuckle. Figure 3.8 and Figure 3.9.

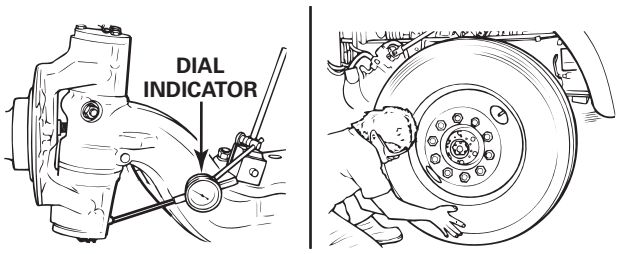

CONVENTIONAL WHEEL END — FRONT VIEW CURBSIDE

1000324d

Figure 3.8

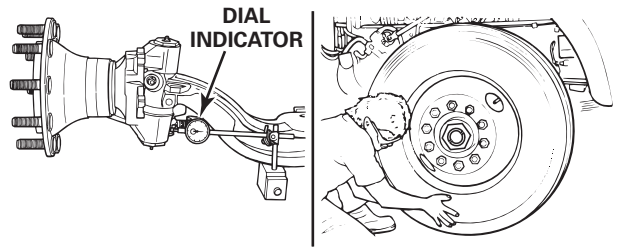

UNITIZED WHEEL END — FRONT VIEW CURBSIDE

1000008e

Figure 3.9

7. Set the dial indicator to ZERO.
8. Move the bottom of the tire side-to-side TOWARD and AWAY from the vehicle.
   - **If the dial indicator moves a total of 0.015-inch (0.381 mm):** The lower bushing is worn or damaged. Replace both bushings in the knuckle. Refer to Section 4, Section 5 and Section 6. Figure 3.8 and Figure 3.9.

Unitized Wheel Ends

⚠ DANGER

The unitized wheel-end maintenance and inspection procedures provided in this manual must be followed to prevent death or serious personal injury.

The unitized wheel end is sealed and greased for life and does not require lubrication. If you disassemble, or attempt to repair or lubricate a unitized wheel-end assembly, you will void the Meritor warranty. The inspection procedures provided in this manual do not instruct you to disassemble the unitized wheel end.

- Unitized wheel ends are not adjustable.
- Do not attempt to set or adjust end play.

Axles with Unitized Wheel-End Hubs and Assembly Dates of July 1, 2000 to May 8, 2002

Vehicles built between July 1, 2000, and May 8, 2002 may be equipped with wheel-end seals that allow contaminants to enter the hub and wheel bearings. Contaminated wheel bearings will damage the hub and spindle.

Check the vehicle's identification decal located on the driver-side door jamb to determine if the vehicle was built between 7-1-00 and 5-8-02. If the vehicle was built during this time period, also check the axle identification plate on the front of the beam to determine the axle model and axle assembly date, which is shown as a Julian date. Refer to Section 2.

You must increase the frequency of inspection intervals on unitized wheel ends with assembly dates of 00182 to 02098 to identify contaminated hubs. Refer to the inspection procedures in this section. The inspection frequency for axles with assembly dates of 00182 to 02098 has been increased to include a Basic Inspection performed as part of the fleet's normal preventive maintenance schedule, or not to exceed 50,000 miles (80 467 km). Disregard original inspection intervals specified in this manual and begin with this more frequent schedule for vehicles assembled within the above time period.

NOTE: This more frequent inspection schedule differs from the usual recommendation, which begins Basic Inspections at maximum 50,000-mile (80 467 km) intervals only after the initial Detailed Inspection has been performed at 200,000 miles (321 800 km).

Wheel-to-Hub Mounting

To help determine the cause of movement and looseness, first check the wheel-to-hub mounting.

1. Verify that the wheel is mounted correctly and all wheel-end fasteners and hardware are tightened to the correct specification.
2. Apply the service brake to lock the hub and spindle together.
   - **If you detect movement or looseness:** The king pin or king pin bushings should be inspected. Refer to procedure in this section.
   - **If applying the service brake eliminates movement or looseness:** Proceed to Detailed Inspection to determine the unitized wheel-end hub end play.

If the Vehicle is Equipped with ABS on the Steer Axle

In addition to scheduled preventive maintenance, if driver reports indicate the ABS light has been coming ON, and ABS diagnostics indicate the sensor gap is out-of-adjustment, check for possible wheel-end looseness as the cause.

Basic Inspection

After the initial 200,000-mile (321 800 km) detailed inspection, perform a basic inspection at each scheduled preventive maintenance interval, not to exceed 50,000-mile (80 467 km) intervals.

1. Park the vehicle on a level surface. Block the rear wheels to prevent the vehicle from moving.
2. Raise the vehicle so that the front wheels are off the ground. Support the vehicle with safety stands. Do not use a jack to support the vehicle.

NOTE: If a ticking sound is detected during rotation, this does not indicate a hub problem. It is a normal occurrence.

3. Visually inspect the unitized wheel end as you rotate the tire and unitized wheel-end assembly. Verify that it rotates smoothly and without noise. While rotating the wheel, grasp the brake chamber to feel for unitized wheel-end hub vibration.
   - **If the tire and unitized wheel-end assembly does not rotate smoothly, or you hear noise (such as wheel bearing grind) or feel wheel-end hub vibration during rotation:** Replace the unitized wheel-end hub. Refer to Section 4, Disassembly; and Section 6, Assembly, for the procedures.
   - **If the wheel end rotates smoothly:** Proceed to Step 4.
4. Grasp the tire and wheel-end assembly at the nine and three o'clock positions. Check for vertical and horizontal movement. With your hands, apply approximately 50 lb (23 kg) of force to the assembly. You should not feel or see any looseness or movement.
   - **If you feel or see any movement or looseness in the tire and wheel-end assembly:** Perform the Detailed Inspection in this section to determine the cause of the movement, such as worn king pin bushings or pins; wheel-to-hub-mounting end play; unitized wheel-end hub end play; or a combination of them all. To determine unitized wheel-end hub end play, refer to Detailed Inspection in this section.

   If other front axle components, such as king pin bushings, require inspection or service, refer to the appropriate procedures in this manual.

Detailed Inspection

Perform detailed inspections after the initial 200,000 miles (321 800 km) of operation and after every additional 200,000 miles (321 800 km) of operation thereafter.

1. Park the vehicle on a level surface. Block the rear wheels to prevent the vehicle from moving.
2. Remove the hubcap.
3. Raise the vehicle so that the front wheels are off the ground. Support the vehicle with safety stands. Do not use a jack to support the vehicle.

NOTE: The outboard and inboard seals may purge small amounts of grease that are visible during inspection. Figure 3.10. This is a normal occurrence.

4. Remove the wheel and drum. Attach the magnetic base of a dial indicator onto the end of the spindle. Figure 3.11. Touch the indicator stem perpendicular against the unitized wheel-end mounting face.

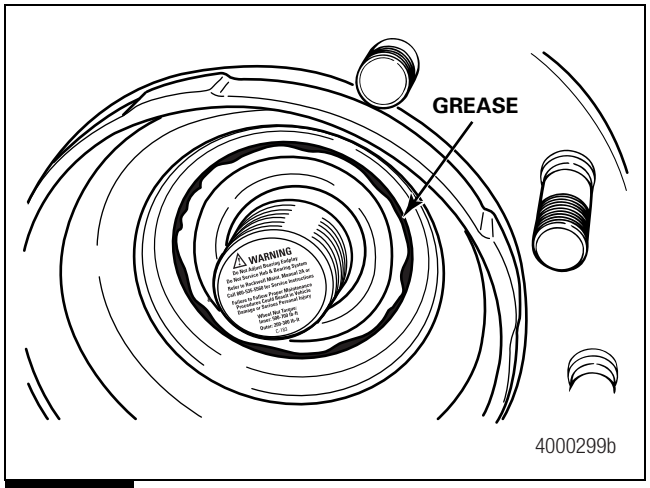

Figure 3.10

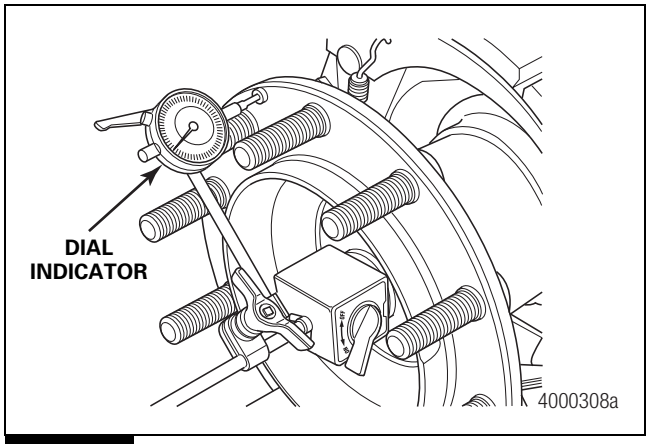

Figure 3.11

5. Set the dial indicator to ZERO. Do not rotate the wheel end. Place your hands at the nine and three o'clock positions.
6. Push the unitized wheel end straight IN. Note the reading. Pull the unitized wheel end straight OUT. Note the reading.
   - **If the total movement of the dial indicator is less than 0.003-inch (0.08 mm):** The inspection is complete. No adjustment is required.
   - **If the total movement of the dial indicator is 0.003-inch (0.08 mm) or greater:** Remove the outer bearing nut and tabbed washer. Tighten the inner wheel bearing nut to 500-700 lb-ft (679-949 N•m) while rotating the unitized wheel end a minimum of five rotations. Figure 3.12.

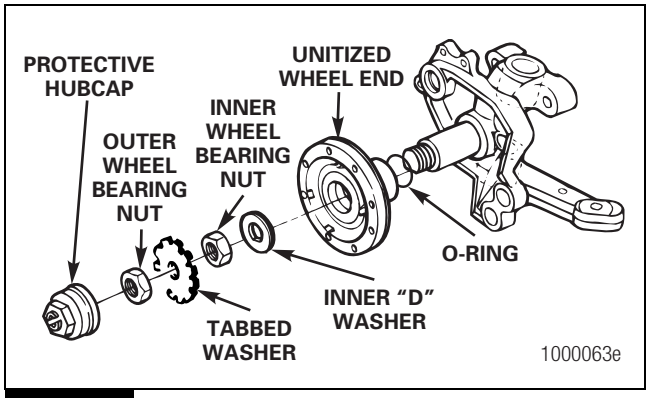

Figure 3.12

7. Install the tabbed washer and outer wheel bearing nut onto the spindle. Tighten the outer wheel bearing nut to 200-300 lb-ft (271-476 N•m).

NOTE: The inner wheel bearing nut and the outer wheel bearing nut are identical, but the torque values are different.

8. Reattach the dial indicator. Set the dial indicator to ZERO. Do not rotate the wheel end. Place your hands at the nine and three o'clock positions.
9. Push the unitized wheel end straight IN. Note the reading. Pull the unitized wheel end straight OUT. Note the reading.
   - **If the total movement of the dial indicator is greater than 0.003-inch (0.08 mm) but less than 0.006-inch (0.15 mm):** Record the measurement in a maintenance log, and perform a basic inspection at the next regularly-scheduled maintenance interval, or not to exceed 50,000 miles (80 467 km), whichever comes first.
   - **If the total movement of the dial indicator is 0.006-inch (0.15 mm) or greater:** Replace the unitized wheel-end hub. You must inspect a replacement hub before you install it. Refer to Replacement Hub Inspection in this section.
10. After you've taken the measurement, bend the parts of the tabbed washer that protrude over the flats of the outer wheel bearing nut and the inner wheel bearing nut. Bend the washer a minimum of one flat edge to each nut.

NOTE: If a ticking sound is detected during rotation, this does not indicate a hub problem. It is a normal occurrence.

11. Verify that the unitized wheel end rotates smoothly and without noise. While rotating the wheel, grasp the brake chamber to feel for unitized wheel-end hub vibration.
    - **If the tire and unitized wheel-end assembly does not rotate smoothly, or you hear noise (such as wheel bearing grind) or feel wheel-end hub vibration during rotation:** Replace the unitized wheel-end hub. You must inspect a replacement hub before you install it. Refer to Replacement Hub Inspection in this section.
    - **If the wheel end rotates smoothly:** The inspection is complete. Reinstall the wheel and drum. Return the vehicle to service.

Replacement Hub Inspection

1. Remove the replacement hub from the box and place it onto a clean surface.
2. Examine the interior of the hub to verify the following.

A. The inner clip ring has not become dislodged in shipment and is in correct alignment with the inner and outer bearings. The gap between the inner and outer bearing sets and the clip ring must be equal. Figure 3.13.

B. The gap between the ends of the clip ring must be equal and not exceed 0.25-inch (6 mm). If necessary, adjust by hand. Figure 3.13.

C. The bearing face must be clean with no seal coating, dirt or dust.

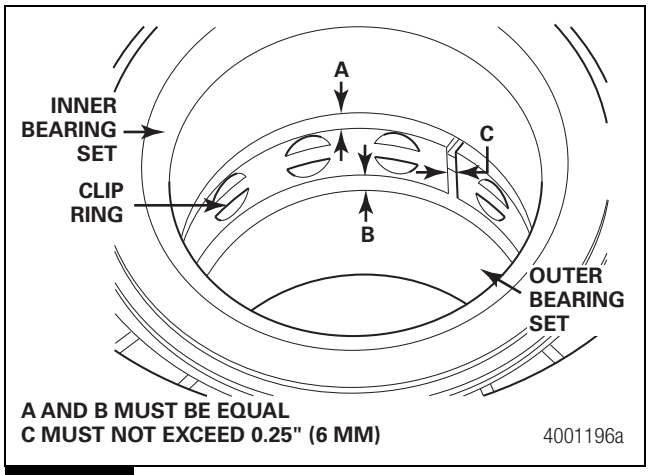

Figure 3.13

3. Examine the exterior of the hub to verify the following.

   A. There is no visible damage to the inboard or outboard seals and the bearings have not become unseated. Figure 3.14 and Figure 3.15.

   B. The tone ring teeth are not damaged and there are no broken or missing teeth on the tone ring. Figure 3.15.

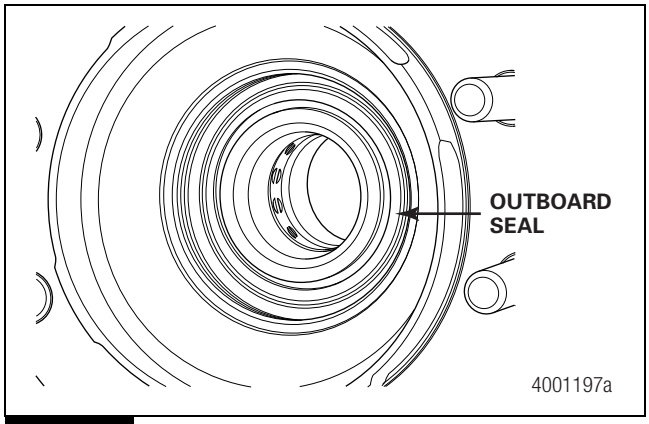

Figure 3.14

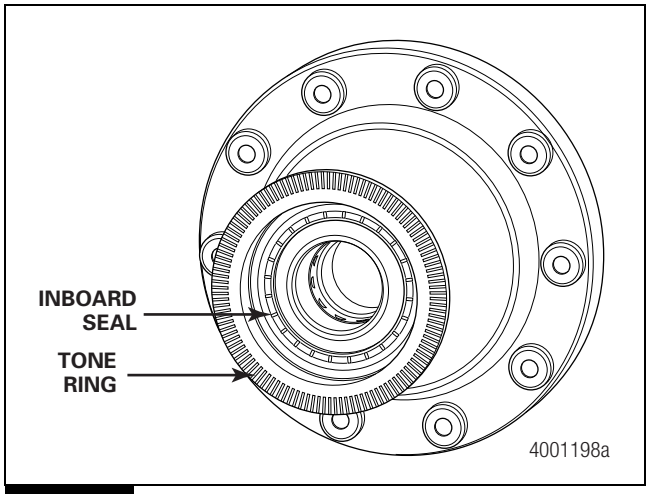

Figure 3.15

Tie Rod and Cross Tube Assembly

NOTE: Do not grease the tie rod assembly before you perform the inspection.

You may not be able to detect loose or worn tie rod ends during operation. Under normal operating conditions, wear occurs over time. The preload bearings inside each tie rod end provide less resistance, which can affect steering control, front tire wear and other axle components.

Regularly-scheduled inspection and maintenance helps to minimize the effects of tie rod end wear on the vehicle. Refer to Table N for inspection intervals.

1. Park the vehicle on a level surface with the wheels STRAIGHT. Block the wheels to prevent the vehicle from moving. Set the parking brake. Figure 3.16.

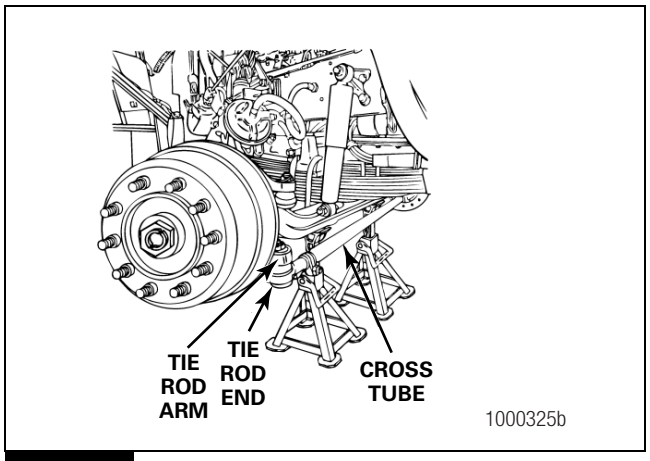

Figure 3.16

2. Raise the vehicle so that the front wheels are off the ground. Support the vehicle with safety stands. Do not use a jack to support the vehicle.
3. With the engine off, turn the wheels from full left to full right. Return to the straight-ahead position. This step will require more force for vehicles with the power steering off.
4. Check the tie rod boot for cracks, tears or other damage. Also check the boot seals for damage. Replace the entire tie rod end if the boot is damaged or missing. Figure 3.17.

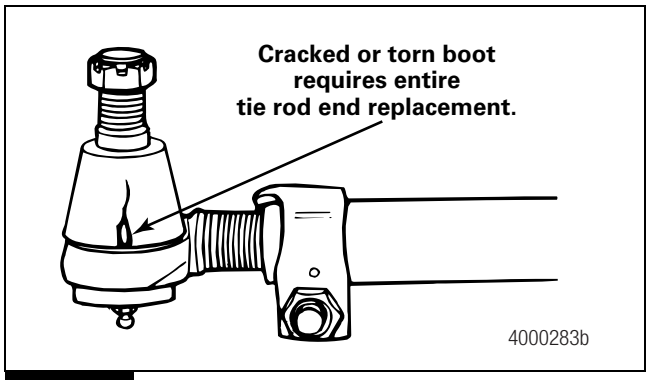

Figure 3.17

⚠ DANGER

Verify that a cotter pin is installed through the tie rod end, and the tie rod end nut is tightened to the correct torque specification. Replace missing cotter pins and tighten loose tie rod end nuts. A missing cotter pin or loose tie rod end nut can cause loss of steering control. Death or serious personal injury can result.

5. Check that the tie rod nut is installed and secured with a cotter pin.
   - **If the cotter pin is missing:** Tighten the tie rod end nut to the correct specification. Install a new cotter pin. Always tighten the tie rod nut to the specified torque when setting the cotter pin. Refer to Section 10. Do not back-off the nut to insert the cotter pin. Figure 3.18.

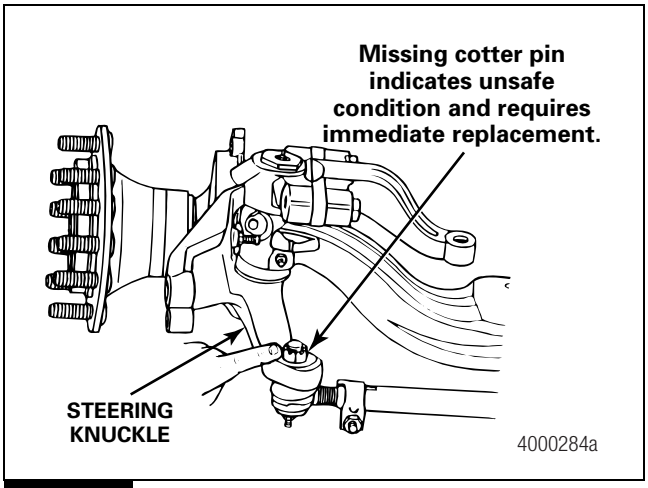

Figure 3.18

6. Check that the tie rod end is threaded correctly into the cross tube and installed deeper than the end of the cross tube slot. The tie rod end must be visible the entire length of the cross tube slot. Figure 3.19.

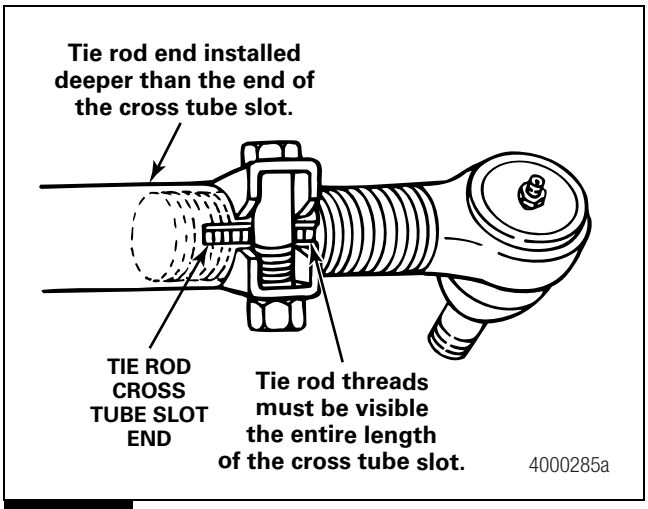

Figure 3.19

7. On tie rods designed with grease fittings, check that the grease fittings are installed. Replace a grease fitting if it is damaged or does not allow grease to flow through the fitting properly. Figure 3.20.

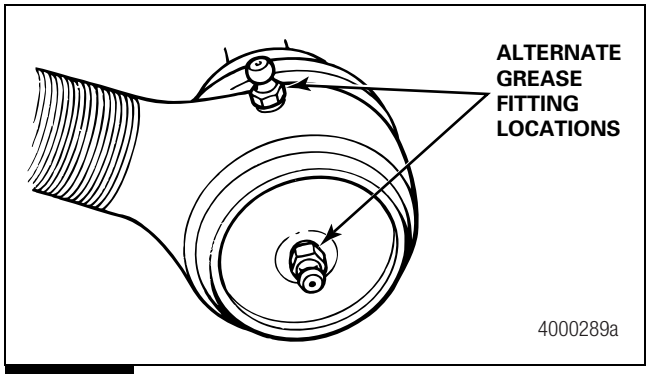

Figure 3.20

8. By hand or using a pipe wrench with jaw protectors to avoid gouging the cross tube, rotate the cross tube toward the FRONT of the vehicle and then toward the REAR. After rotating, center the cross tube between the stop positions.
   - **If the cross tube will not rotate in either direction:** Replace both tie rod ends.
9. Position yourself directly below the ball stud socket. Using both hands, grasp the assembly end as close to the socket as possible, no more than 6-inches (152.4 mm) from the end.

⚠ CAUTION

Only use your hands to check for movement or looseness of the tie rod assembly. Do not use a crow bar, pickle fork or two-by-four. Do not apply pressure or force to tie rod assembly ends or joints. Do not rock the tires with the vehicle on the ground or with the wheels raised. Damage to components can result.

10. Apply hand pressure of approximately 100 pounds in a vertical PUSH and PULL motion several times. Check for any movement or looseness at both tie rod ends. Figure 3.21.
    - **If there is any movement in the tie rod assembly:** Replace both tie rod ends.

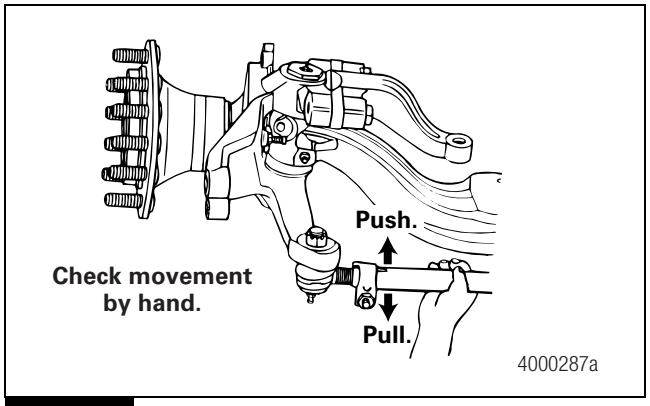

Figure 3.21

⚠ CAUTION

Replace bent or damaged cross tubes with original equipment parts of the same length, diameter and threads. Do not attempt to straighten a bent cross tube. Damage to components can result.

11. Inspect the cross tube and clamps for damage. Figure 3.22.
    - **If the cross tube is bent or cracked:** Replace it. Use original equipment parts of the same length, diameter and threads.
    - **If the clamps are damaged:** Replace them.
    - **If either clamp has become welded to the cross tube:** Replace the entire cross tube assembly. Use original equipment parts of the same length, diameter and threads.

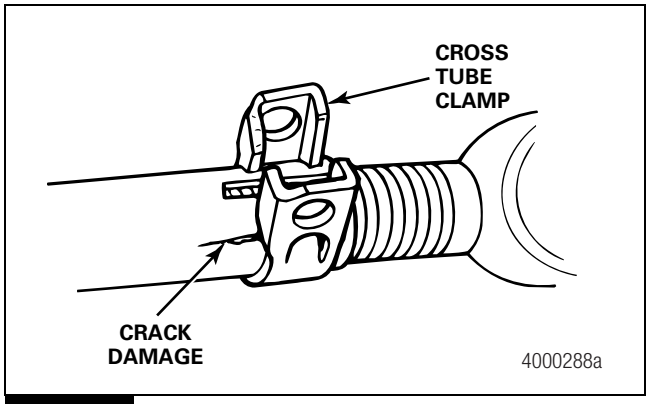

Figure 3.22

Department of Transportation Roadside Tie Rod Assembly Replacement Criteria

When the roadside check indicates tie rod movement of 1/8-inch (3 mm) or more, immediately remove the vehicle from service to replace the tie rod. Figure 3.22.

- **If the roadside check is less than 1/8-inch (3 mm) tie rod end movement:** The vehicle does not need to be immediately removed from a service run. Schedule a major out-of-service inspection and maintenance as soon as possible.

Hazard Alert Messages

Read and observe all hazard alert messages in this publication.

⚠ DANGER

Park the vehicle on a level surface. Block the wheels to prevent the vehicle from moving. Support the vehicle with safety stands. NEVER work under a vehicle supported only by jacks. Jacks can slip and fall over. Failure to use safety stands can result in death or serious personal injury and damage to components.

⚠ WARNING

To prevent eye injury, always wear eye protection when performing vehicle maintenance or service.

Use a brass or leather mallet for assembly and disassembly procedures. NEVER hit steel parts with a steel hammer. Pieces of a part can break off. Serious personal injury and damage to components can result.

Removal

Wheel Ends

Axles with Conventional Wheel Ends

1. Park the vehicle on a level surface. Block the wheels to prevent the vehicle from moving. Set the parking brake.
2. Raise the front of the vehicle until the front wheels are off the floor. Support the vehicle with safety stands.
3. Use the correct size socket to remove the capscrews that fasten the cap to the hub. Remove the cap and the gasket.
4. Remove the fasteners for the wheel bearings using one of the following procedures.
   A. For double nut and lock fasteners, bend the tabs of the flattened lock washer away from the wheel bearing nut and the adjusting nut. Figure 4.1.
   B. Remove the wheel bearing nut, the lock washer, the pierced lock ring and the adjusting nut from the knuckle. Figure 4.1.

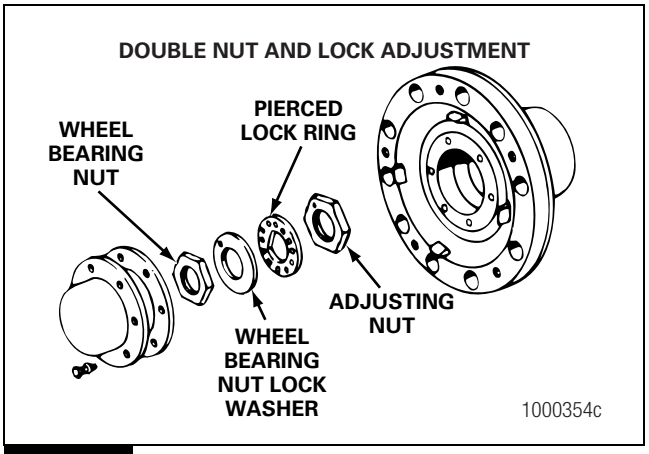

Figure 4.1

   A. For single nut fasteners, remove the cotter pin from the adjusting nut. Figure 4.2.
   B. Remove the adjusting nut and the “D” washer from the spindle. Figure 4.2.

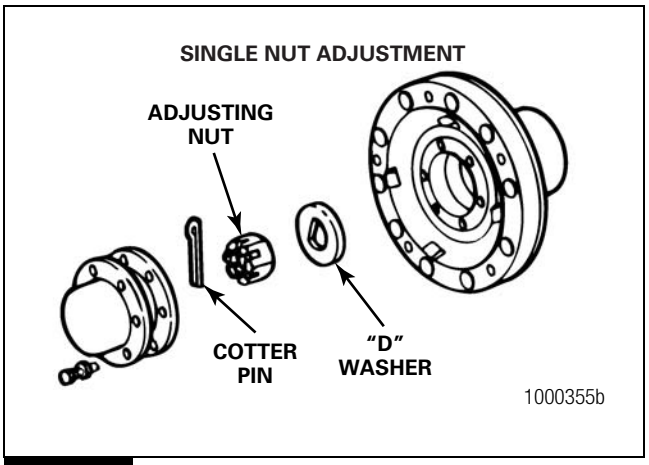

Figure 4.2

5. Remove the outer wheel bearing cone from the hub. Remove the wheel, tire, hub and drum as an assembly.
6. Remove the brake components. Refer to the brake manufacturer’s procedures.
7. Remove the oil seal from the hub. Remove the inner wheel bearing cone.
8. Inspect the wheel bearings. Refer to Section 5.

Axles with Unitized Wheel Ends

NOTE: You may have to remove the unitized wheel end when servicing the king pin, brake cam shaft or when replacing the studs on the unitized wheel end. Unitized wheel end removal is not typically required for servicing the brakes, the tie rod assembly or the steering arms.

1. Park the vehicle on a level surface. Block the wheels to prevent the vehicle from moving. Set the parking brake.
2. Remove the hubcap.
   A. For threaded hubcaps, use the correct size socket to turn the hubcap COUNTERCLOCKWISE. Figure 4.3.
   B. Remove the threaded protective hubcap from the hub.

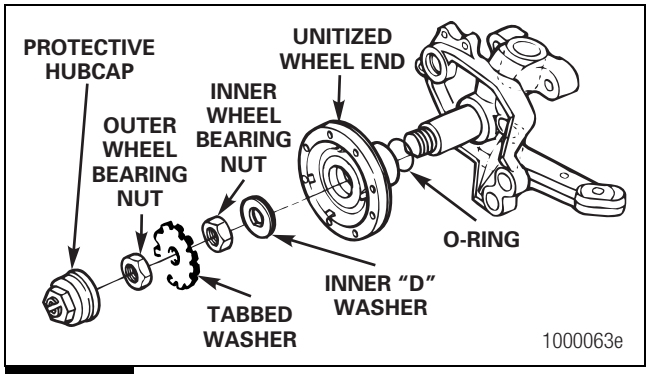

Figure 4.3

   A. For snap-ring hubcaps, insert a screwdriver into the notched end of the snap ring. Figure 4.4.
   B. Remove the snap ring by moving the screwdriver around the circumference of the ring.
   C. Remove the snap-ring hubcap.

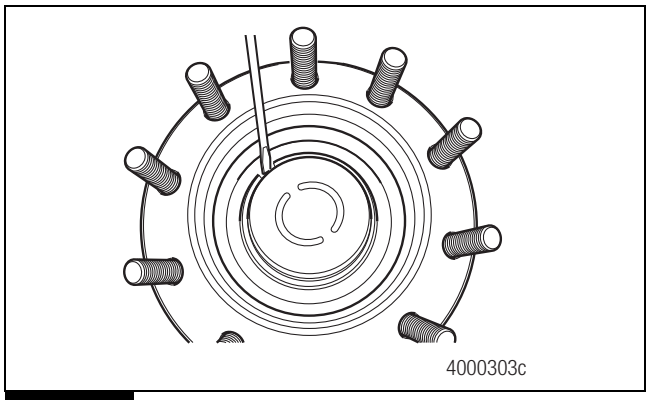

Figure 4.4

3. Use a jack to raise the vehicle so that the front tires are off the ground. Support the front axle with safety stands.
4. Remove the tire and wheel assembly.
5. Bend back and flatten the washer tab folded against the flat edge of the outer wheel bearing nut.
6. Remove the outer wheel bearing nut and the tabbed washer from the spindle.
7. Remove the inner wheel bearing nut and the inner washer from the spindle.

⚠ CAUTION

Align the unitized wheel end STRAIGHT onto the spindle. Do not allow the assembly to misalign and contact the spindle threads. Bearing damage can occur that requires replacement of the entire unitized wheel end.

Hub bearings are not serviceable. Do not remove bearings from the unitized wheel end. Damage to components can result.

8. Remove the unitized wheel end STRAIGHT from the spindle. Figure 4.3.
9. Remove and discard the spindle O-ring. Replace it during assembly.

NOTE: The spindle O-ring enables you to remove the unitized wheel-end hub from the spindle more easily, because it helps to prevent contaminants from entering the assembly.

When you remove the unitized wheel-end hub, install a new O-ring.

10. If the unitized wheel end is difficult to remove from the spindle, use the following procedure.
    A. Use a brass hammer to remove two studs from opposite sides of the unitized wheel end.
    B. Install a 17.5-ton cross block puller with two 8 x 7/8-inch Grade 8 bolts. Figure 4.5.
    C. Use a wrench to gradually tighten the forcing nut and washer against the cross block to separate the unitized wheel end from the knuckle spindle. Figure 4.6.
       - **If you've applied force and the part has not moved:** Use a cross block puller with a larger capacity.

D. Repeat this procedure to remove the unitized wheel end on the opposite side of the axle, if required.

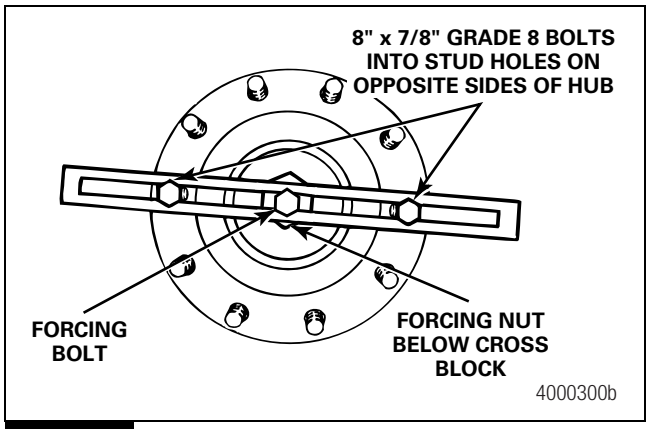

Figure 4.5

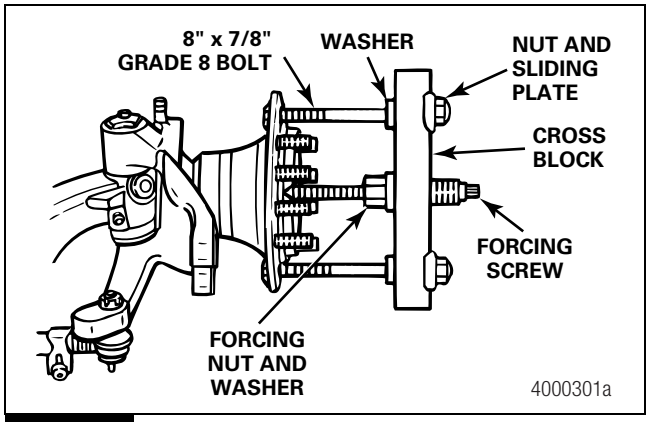

Figure 4.6

Drag Link

Refer to the vehicle manufacturer's procedures to remove the drag link. Figure 4.7.

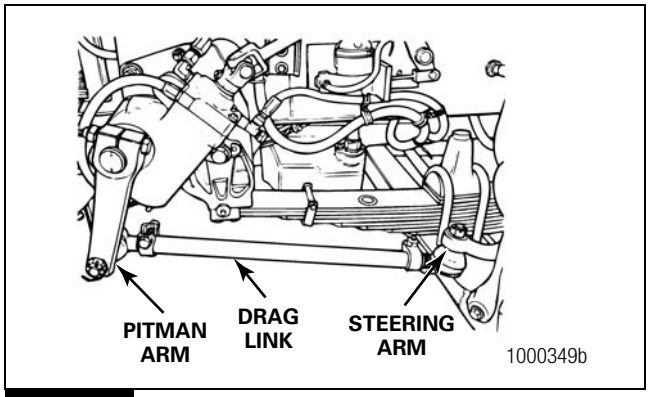

Figure 4.7

Steering Arm

Axles with a Keyed Steering Arm

1. Remove the cotter pin and nut that fasten the steering arm to the drag link. Disconnect the steering arm from the drag link. Figure 4.7.
2. Remove the cotter pin and nut that fasten the steering arm to the knuckle. Figure 4.8.

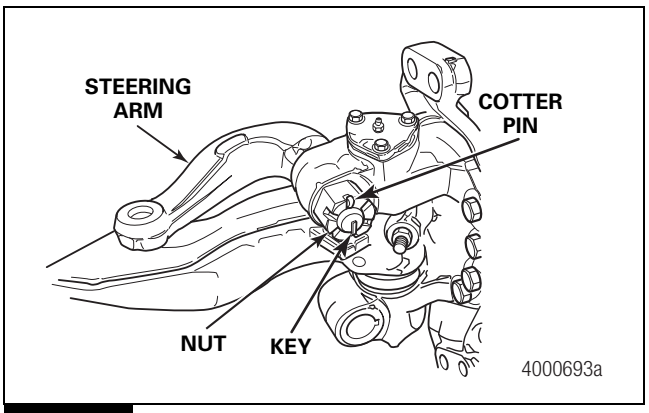

Figure 4.8

3. Remove the steering arm from the knuckle. If necessary, use a leather or plastic mallet to tap on the end of the arm and separate the arm from the knuckle.
4. Remove the key from the steering arm. Inspect the steering arm. Refer to Section 5 for parts inspection information.

MFS Axles with Bolt-On, Integrated Steering and Tie Rod Arm Assemblies

MFS axle models with bolt-on, integrated steering and tie rod arm assemblies are similar to axles with removable keyed steering and tie rod arms.

1. Remove the cotter pin and nut that fasten the drag link to the integrated steering and tie rod arm assembly.
2. Separate the drag link from the integrated steering and tie rod arm assembly.
3. Remove the cotter pin and nut that fasten the cross tube assembly to the integrated steering and tie rod arm assembly.
4. Remove the cross tube assembly from the integrated steering and tie rod arm assembly. If necessary, use a tie rod end puller to separate the tie rod end from the integrated steering and tie rod arm assembly.

5. Remove the two 12-point Ferry-head bolts from the lower middle portion of the integrated steering and tie rod arm assembly. Figure 4.9.

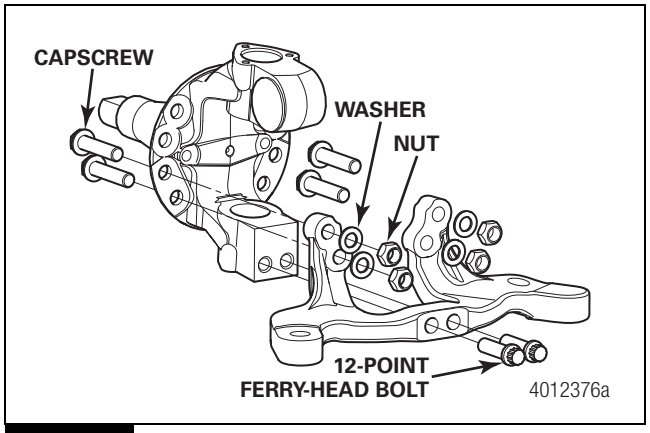

Figure 4.9

6. Remove the four nuts and washers from the capscrews that secure the integrated steering and tie rod arm assembly to the knuckle. Retain the capscrew with a wrench or socket on the wheel hub side to prevent the fastener from turning when loosening the nut. Figure 4.9.

   NOTE: The capscrews also retain the brake spider to the knuckle.

7. Remove the capscrews and integrated steering and tie rod arm assembly from the knuckle.

8. Inspect the steering arm. Refer to Section 5.

Axles with a Bolt-On Steering Arm

1. Remove the two steering-arm-to-knuckle capscrews from the knuckle assembly. Figure 4.10.

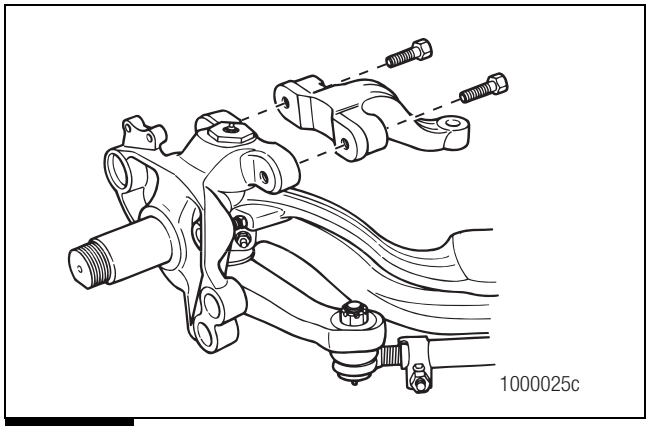

Figure 4.10

2. Remove the steering arm from the knuckle. If necessary, use a leather or plastic mallet to tap the outside of the arm and separate the arm from the knuckle.

3. Remove the steering arm. Inspect the steering arm. Refer to Section 5 for parts inspection information.

Tie Rod Arms, Tie Rod Ends and Cross Tube

⚠ DANGER

If the cross tube clamps are tack-welded, do not remove the tack weld during tie rod assembly removal. If the tack weld is removed, clamp force is reduced. Replace the cross tube if the weld is broken. Loss of steering control, death or serious personal injury can result.

⚠ WARNING

Support the tie rod assembly during maintenance and service to prevent serious personal injury and damage to components.

⚠ CAUTION

Do not heat the arm to remove the tie rod assembly. Heating the tie rod arm will soften parts. Damage to components will result.

Axles with Removable Tie Rod Arms

NOTE: For MFS axles with bolt-on, integrated steering and tie rod arm assemblies, refer to the steering arm removal procedure to remove the tie rod arms.

1. Remove the cotter pins and nuts that fasten each tie rod end to the tie rod arms. Figure 4.11.

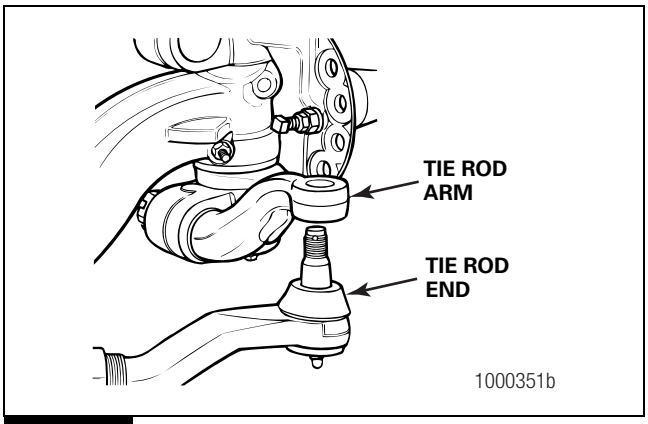

Figure 4.11

2. Disconnect the cross tube assembly from the tie rod arms. If available, use a tie rod end puller to separate the tie rod end from the tie rod arm. Figure 4.11.
3. Remove the cotter pin and nut that fastens the tie rod arms in the knuckle.
4. Remove the tie rod arms from the knuckle. If necessary, use a leather or plastic mallet to tap on the end of the rod. Remove the key.
5. If necessary, use this procedure to remove the tie rod ends.
   A. Mark the position of each tie rod end in the cross tube. Count and record the number of threads that appear outside of the cross tube. Figure 4.12.
   B. Remove the bolts and nuts from the clamp on the cross tube. Rotate the cross tube clamp to remove the nuts and bolts from the clamp. Figure 4.13.
   C. Remove the tie rod ends from the cross tube.

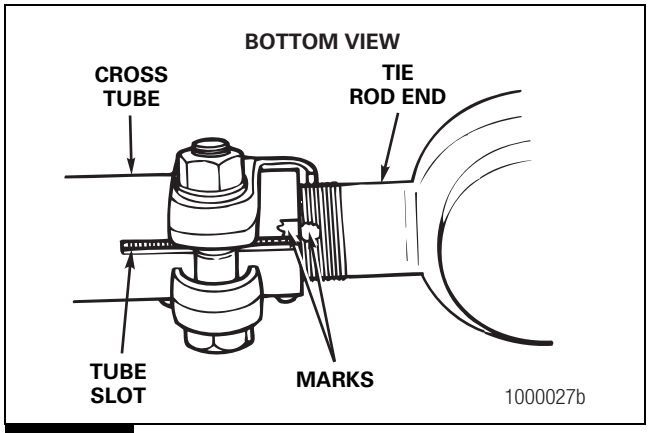

Figure 4.12

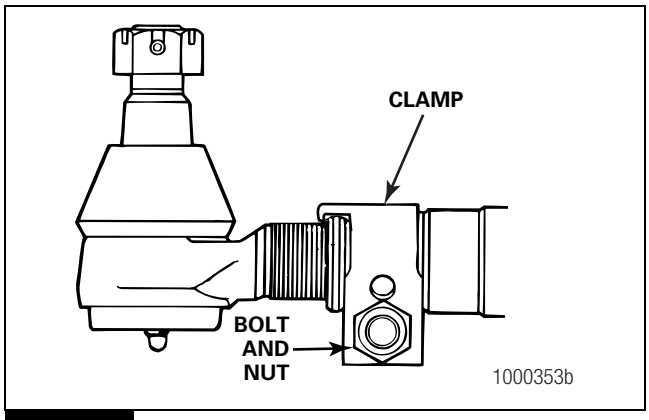

Figure 4.13

6. Inspect the parts. Refer to Section 5 for parts inspection and replacement information.

Axles with Integral Tie Rod Arms

1. Remove the cotter pins and nuts that fasten each tie rod end to the tie rod arms.
2. Disconnect the cross tube assembly from the tie rod arms. If available, use a tie rod end puller to separate the tie rod end from the tie rod arm. Figure 4.14. If necessary, use a leather or plastic mallet to tap on the tie rod end to loosen and remove it.

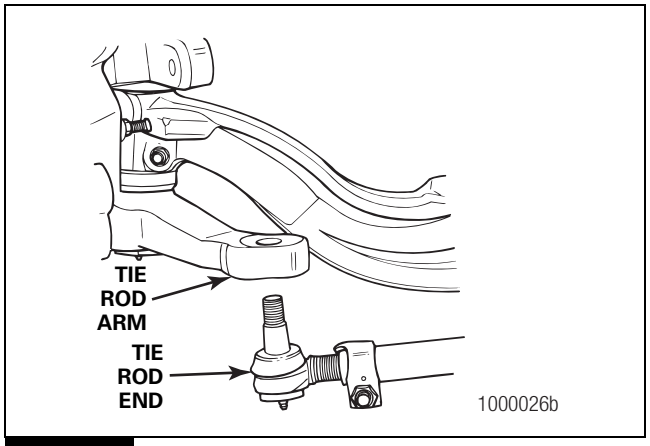

Figure 4.14

3. If necessary, use this procedure to remove the tie rod ends.
   A. Mark the position of each tie rod end in the cross tube. Count and record the number of threads that appear outside of the cross tube. Figure 4.12.
   B. Remove the bolts and nuts from the clamp on the cross tube. Rotate the cross tube clamp to remove the nuts and bolts from the clamp. Figure 4.13.
   C. Remove the tie rod ends from the cross tube.
4. Inspect the parts. Refer to Section 5 for parts inspection and replacement information.

Draw Keys, King Pin Caps, King Pins and Steering Knuckle

Axles with Bolt-On King Pin Caps

1. Remove the wheel ends as described in this section.
2. Vent the air from the brake system. Disconnect the air lines from the brakes.

3. Remove the brake components. Refer to the brake manufacturer's procedures.
4. Remove the tie rod arms and the steering arm from the knuckle. Refer to the procedure in this section.
5. Remove the capscrews that fasten the king pin caps to the top and the bottom of the knuckle. Remove the caps and the gaskets. Figure 4.15.

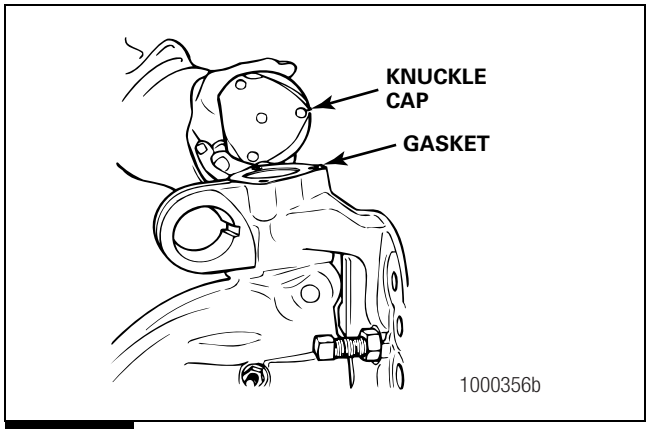

Figure 4.15

6. Remove the plain or the threaded draw keys. Refer to Table C.

Table C: Threaded or Plain Draw Keys

Threaded Draw Keys	Plain Draw Keys
All other axle models	FC-901, FC-921, FE-970, FF-971 and FL-901

- **For plain draw keys:** Use a brass hammer and a steel drift to remove the draw key. Place the drift onto the small, "D"-shaped end of the key. Figure 4.16.
- **For threaded draw keys:** Perform the following procedure.

A. Loosen the threaded draw key lock nut until the top of the lock nut is even with the end of the draw key.

B. Use a brass drift and a hammer to hit the end of the draw key. Figure 4.17.

C. Remove the nut from the draw key. Remove the draw key from the knuckle.

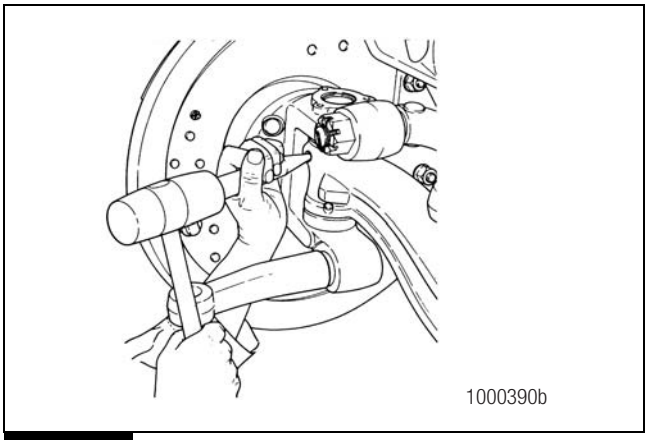

Figure 4.16

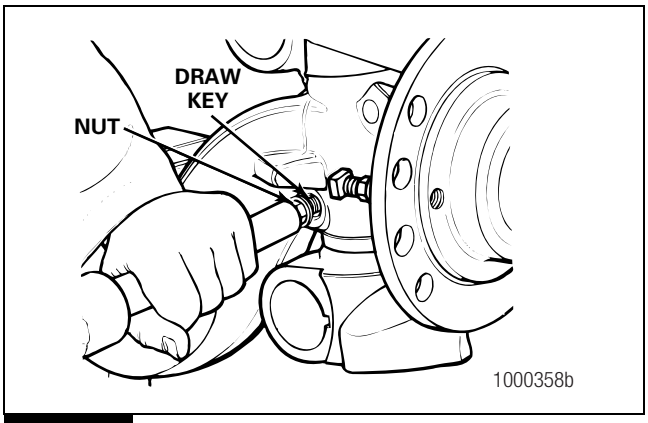

Figure 4.17

7. If you're not replacing the bushings, use the following procedure to prevent damaging the bushings during king pin removal.

A. Use a brass drift and a hammer to remove the king pins from the knuckle. Figure 4.18.

B. Remove any flaring on the drift that touches the bushings.

C. Wrap tape to a thickness of 1/16-inch (1.5 mm) onto the end of the drift.

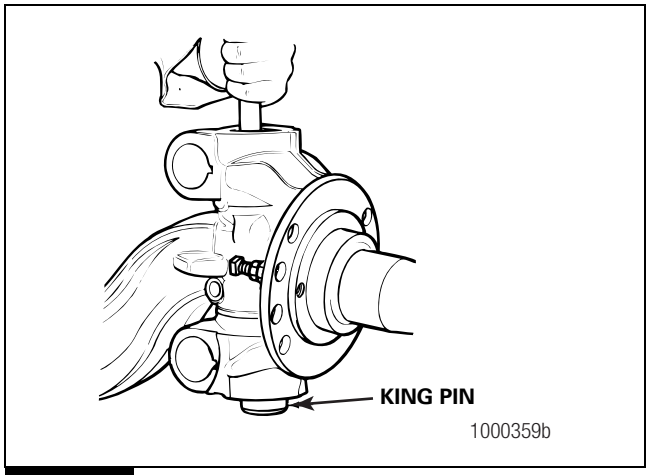

Figure 4.18

8. If the king pin is hard to remove, use a hydraulic king pin remover. Refer to Section 11. To obtain this tool, refer to the Service Notes page on the front inside cover of this manual.
9. Remove the knuckle from the axle beam.

⚠ WARNING

Wear gloves when removing or installing shims. Shims have sharp edges that can cause serious personal injury.

10. While wearing gloves, remove the shims, the thrust bearing and the seal from the beam and knuckle. Figure 4.19.

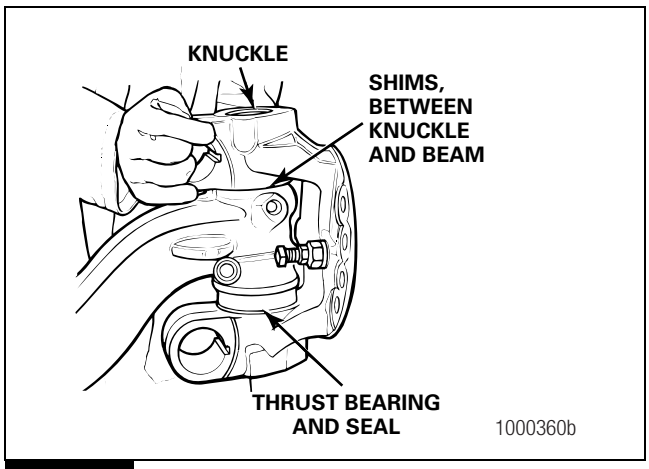

Figure 4.19

11. Inspect the parts. Refer to Section 5 for parts inspection and replacement information.

Axles with Threaded King Pin Caps

1. Remove the wheel end as described in this section.
2. Vent the air from the brake system. Disconnect the air lines from the brakes.
3. Remove the brake components. Refer to the brake manufacturer's procedures.
4. Remove the steering arm from the knuckle, if applicable.
5. Remove the top and bottom king pin caps. Depending on the axle configuration, the top and bottom king pin caps may be different part numbers. Mark the top and bottom king pin caps for correct reassembly. Figure 4.20.

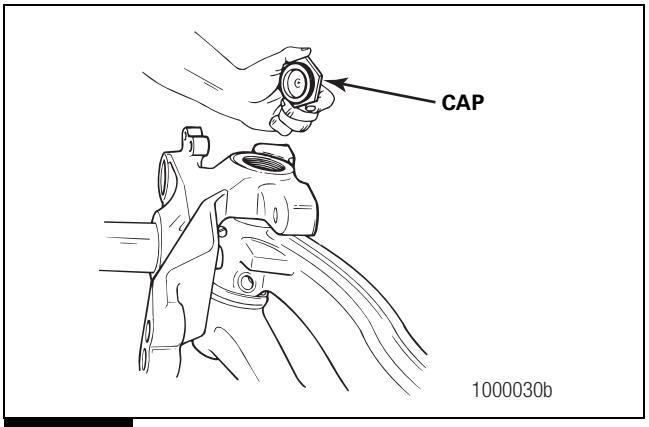

Figure 4.20

6. Use the following procedure to remove the upper and lower draw keys from the knuckle.
   A. Loosen the draw key nut. Use a brass drift and a hammer to hit the end of the draw key. Figure 4.21.
   B. Remove the nut from the draw key. Figure 4.22. Remove the draw key from the knuckle.

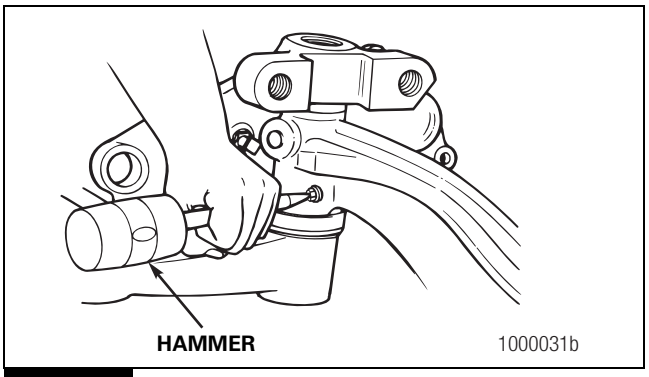

Figure 4.21

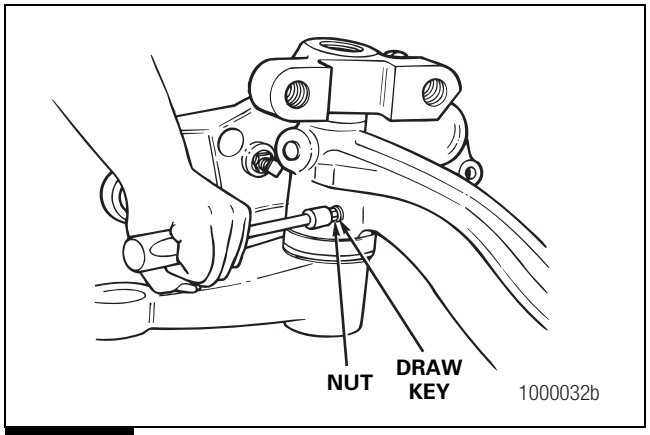

Figure 4.22

7. If you're not replacing the bushings, use the following procedure to prevent damage to the bushings during king pin removal.
   A. Use a hammer and brass drift to remove the king pins from the knuckle. Figure 4.23.
   B. Remove any flaring on the drift that touches the bushings.
   C. Wrap tape to a thickness of 1/16-inch (1.5 mm) onto the end of the drift.

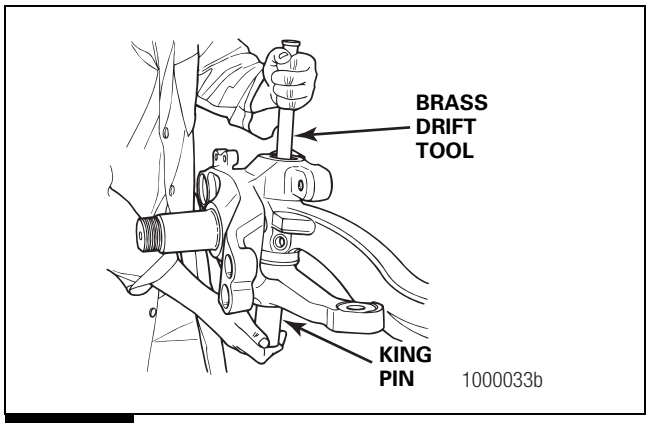

Figure 4.23

8. If the king pin is hard to remove, use a hydraulic king pin remover. Refer to Section 11. To obtain this tool, refer to the Service Notes page on the front inside cover of this manual.

⚠ WARNING

Wear gloves when removing or installing shims. Shims have sharp edges that can cause serious personal injury.

9. While wearing gloves, remove the integral thrust bearing and seal, and the shims from the beam and knuckle. Figure 4.24.

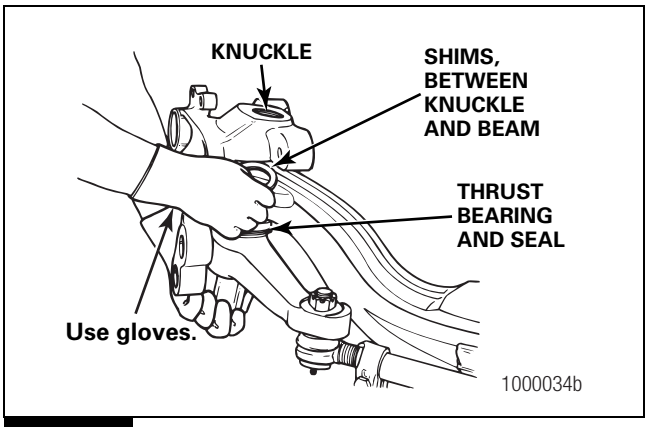

Figure 4.24

10. Remove the knuckle from the axle beam. Figure 4.25. Inspect the parts. Refer to Section 5 for parts inspection and replacement information.

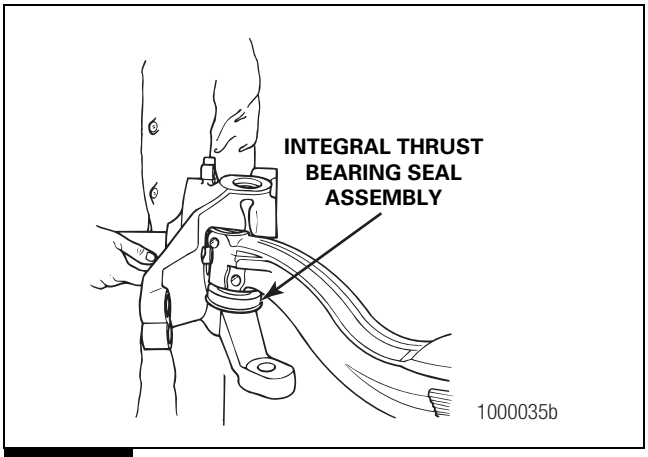

Figure 4.25

King Pin Bushings

⚠ DANGER

Observe all hazard alerts provided by the press manufacturer to avoid death or serious personal injury.

Axles with Conventional Wheel Ends — Nylon Bushings

1. Remove and discard the lower king pin seal. Figure 4.26.

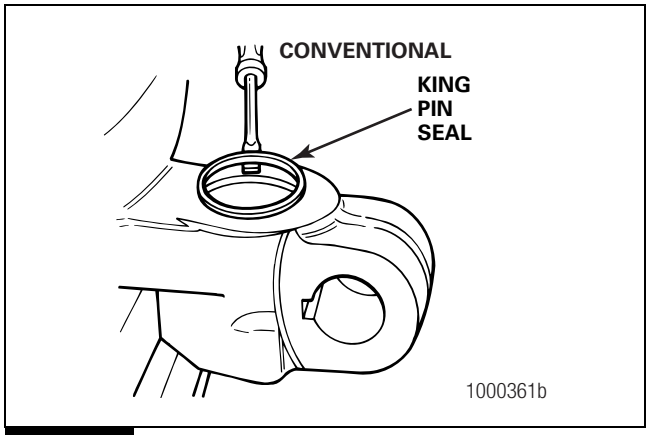

Figure 4.26

2. Turn the knuckle upside down and remove the upper king pin seal. Remove the old bushings.
3. Remove the top and the bottom bushings from the knuckle bore. Figure 4.27.

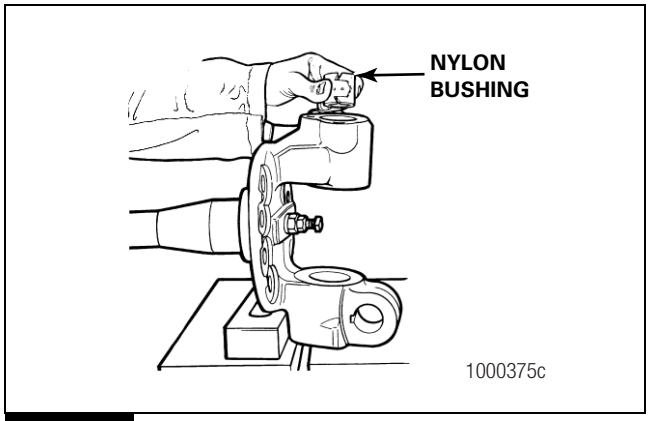

Figure 4.27

Axles with Conventional Wheel Ends — Easy Steer and Bronze Bushings

1. Remove and discard the lower king pin seal. Figure 4.26.
2. Turn the knuckle upside down and remove the upper king pin seal. Remove the old bushings.

NOTE: For some axles, you can remove the bushings with a bushing service kit. Refer to Section 11.

3. Make a tool to remove the bushings. Refer to Section 11.
4. Place the knuckle in a vise. Use a press with a five-ton capacity. The knuckle must not move when the bushings are removed.
5. Install the tool into the upper king pin bushing. Press the upper king pin bushing from the knuckle bore. Figure 4.28.
6. Turn the knuckle upside down and install the tool into the lower king pin bushing. Press the lower bushing from the knuckle bore. Figure 4.28.

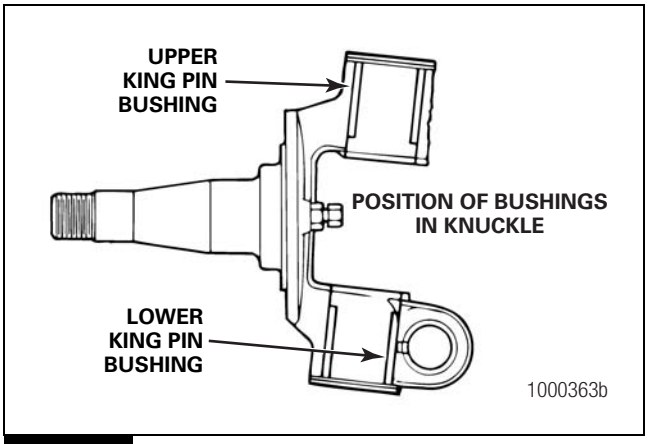

Figure 4.28

Axles with Unitized Wheel Ends — Easy Steer Bushings

1. Remove and discard the lower king pin seal. Figure 4.29.

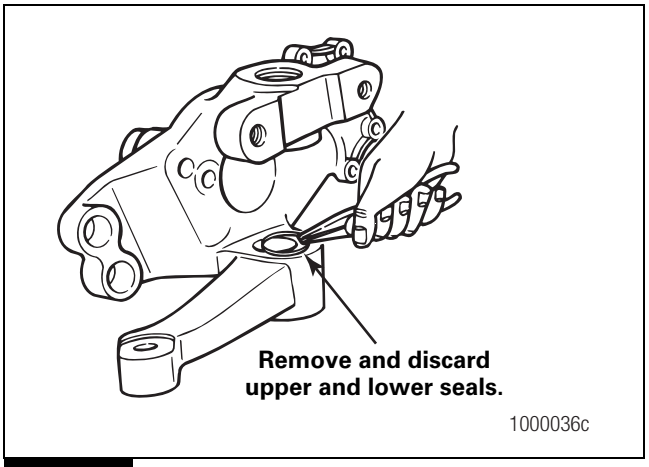

Figure 4.29

2. Turn the knuckle over. Remove the upper king pin seal.
3. Use the following procedure to remove the old bushings.
   A. Make a tool to remove the bushings. Refer to Section 11.

B. Place the knuckle into a vise. Use a press with a five-ton capacity. The knuckle must not move when the bushings are removed.

C. Install the tool into the upper king pin bushing and press it from the knuckle bore. Figure 4.30.

D. Turn the knuckle upside down. Install the tool into the lower king pin bushing and press it from the knuckle bore. Figure 4.31.

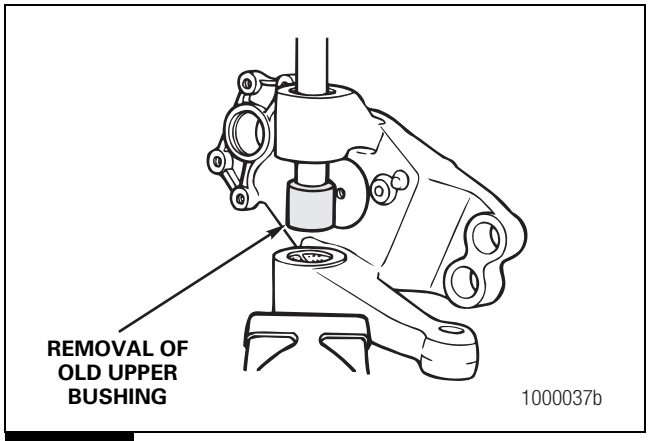

Figure 4.30

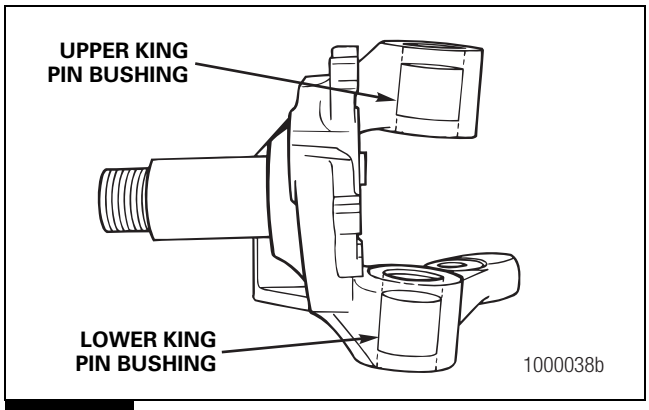

Figure 4.31

Hazard Alert Messages

Read and observe all hazard alert messages in this publication.

⚠ DANGER

Replace damaged or out-of-specification axle components. NEVER bend, repair or recondition axle components by welding or heat-treating. A bent axle beam reduces axle strength, affects vehicle operation and voids Meritor's warranty. Death or serious personal injury can result.

⚠ WARNING

To prevent eye injury, always wear eye protection when performing vehicle maintenance or service.

Replace

Worn or Damaged Parts

Do not repair or recondition front axle components. Replace damaged or out-of-specification components. All major components are heat-treated and tempered.

Do not perform the following operations on front axle components.

- Weld steering arms, tie rod arms, knuckles, king pins, axle beams, tie rod assemblies, hubs, drums or brakes.
- Hot- or cold-bend the knuckles, steering arms, tie rod arms, ball studs, axle beams or tie rod assemblies.
- Drill holes in the axle beam for the king pins.
- Drill draw key holes in the knuckle.
- Spray-weld bearing diameters onto the knuckles or into the machined bores.
- Disassemble the unitized wheel end.
- Mill or machine any components.

⚠ DANGER

Solvent cleaners can be flammable and poisonous, and cause serious personal injury or death. Examples of solvent cleaners are carbon tetrachloride, and emulsion-type and petroleum-base cleaners. Read the manufacturer's instructions before using a solvent cleaner, then carefully follow the instructions. Also follow the procedures below.

- **Wear eye protection.**
- **Wear clothing that protects the skin.**
- **Work in a well-ventilated area.**
- **NEVER use gasoline or solvents that contain gasoline. Gasoline can explode.**
- **Hot solution tanks or alkaline solutions must be used correctly. Read the manufacturer's instructions before using hot solution tanks and alkaline solutions. Then carefully follow the instructions.**

⚠ CAUTION

Do not use hot solution tanks or water and alkaline solutions to clean ground or polished parts. Damage to parts can result.

Clean, Dry and Inspect Parts

Ground or Polished Parts

Use a cleaning solvent to clean the ground or polished parts and surfaces. Kerosene or diesel fuel can be used for this purpose. DO NOT USE GASOLINE.

Do NOT clean ground or polished parts in a hot solution tank or with water, steam or alkaline solutions. These solutions will cause corrosion of the parts.

Rough Parts

Rough parts can be cleaned with the ground or polished parts. Rough parts also can be cleaned in hot solution tanks with a weak alkaline solution. Parts must remain in the hot solution tanks until they are completely cleaned and heated.

Dry Cleaned Parts

Parts must be dried immediately after cleaning. Dry parts with clean paper or rags, or compressed air. Do not dry bearings by spinning with compressed air.

Prevent Corrosion on Cleaned Parts

Apply a light oil to cleaned and dried parts that are not damaged and are to be immediately assembled. Do NOT apply oil to the brake linings or the brake drums.

If the parts are to be stored, apply a good corrosion preventative to all surfaces. Do NOT apply the material to the brake linings or the brake drums. Store the parts inside special paper or other material that prevents corrosion.

All tapered joints must be clean and dry with no lubrication or corrosion preventative applied to the mating surfaces.

Installation

New Fasteners with Pre-Applied Adhesive Patches

1. Clean the oil and dirt from the threaded holes. Use a wire brush to remove the old patch material. There is no special cleaning required.

⚠ CAUTION

Do not apply adhesives or sealants onto new fasteners with pre-applied adhesive patches or into the threaded holes. If other adhesives or sealants are used, the new adhesive will not function correctly. Damage to components can result.

2. Assemble the parts using the new pre-applied adhesive fasteners.

NOTE: There is no drying time required for fasteners with pre-applied adhesive.

3. Tighten the fasteners to the required torque value for that size fastener. Refer to Section 10.

Original or Used Fasteners Using Meritor Specification 2297-C-7049 Liquid Adhesive, Loctite® 680 Adhesive or Equivalent

⚠ WARNING

Take care when using Loctite® adhesive to avoid serious personal injury. Read the manufacturer's instructions before using this product. Follow the instructions to prevent irritation to the eyes and skin. If Loctite® adhesive material gets into the eyes, follow the manufacturer's emergency procedures and get checked by a physician as soon as possible.

1. Clean the oil, dirt and old adhesive from all threads and threaded holes. Use a wire brush.

⚠ CAUTION

Do not apply adhesive to the fastener threads. Air pressure in the hole will push the adhesive out as the fastener is installed. Damage to components can result.

NOTE: There is no drying time required for Meritor specification 2297-C-7049 liquid adhesive, Loctite® 680 adhesive or equivalent.

2. Apply four or five drops of Meritor liquid adhesive, Loctite® 680 adhesive or equivalent into each threaded hole or bore only. Figure 5.1 and Figure 5.2.

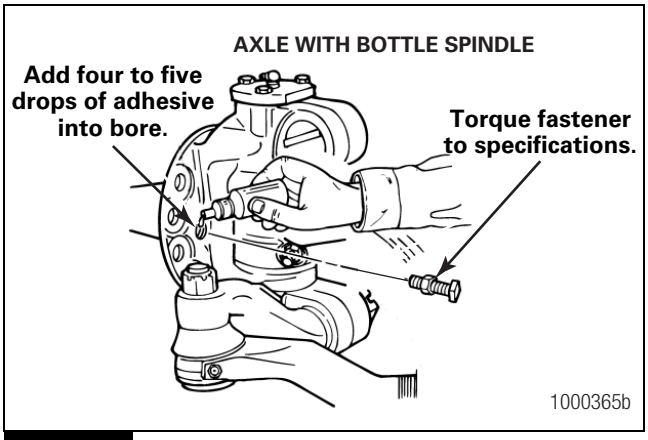

Figure 5.1

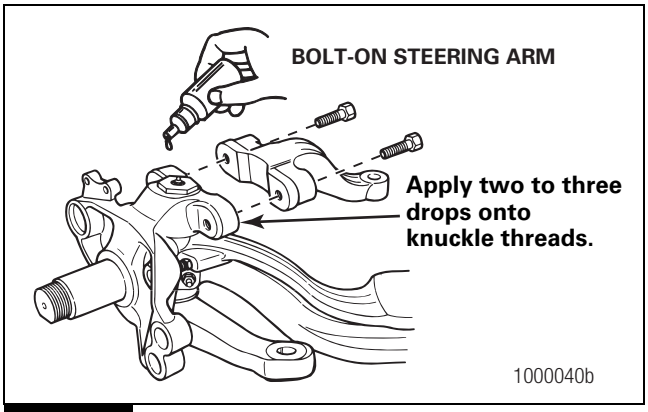

Figure 5.2

3. Tighten the fasteners to the required torque value for that size fastener. Refer to Section 10.

Check the Torque Values of Dri-Loc® Fasteners Not Requiring Removal

If Dri-Loc® fasteners do not require removal from components, use the following procedure to check the fasteners for the correct torque value.

Apply the minimum amount of torque required for that size fastener. Refer to Section 10. The fastener must not rotate.

- **If the fastener rotates:** Remove the fastener from the component. Inspect the fastener and the hole for wear and damage. Repair as necessary.
- **If the fastener and the hole are in good condition:** Apply adhesive into the threaded hole. Follow the procedure to install old Dri-Loc® fasteners.

Inspection

Parts

Axles with Conventional and Unitized Wheel Ends

⚠ WARNING

Use only dye penetrant inspection techniques on unitized wheel-end hub units. Be careful not to get penetrant fluids into the bore of the hub unit. Do not use fluid immersion-based crack inspection techniques (i.e., submerging parts in fluid and looking for leaks). The fluids can enter the joint between the inner bearing cones through the bore of the hub unit and damage the lubricant. Serious personal injury and damage to components can result.

Refer to the following guidelines to carefully inspect all disassembled parts before assembly.

1. Inspect and replace any parts that are worn, cracked or damaged. Check for cracks using dye penetrant, magnetic flux or fluorescent particle testing methods. Follow the inspection product manufacturer's procedures.
2. Remove the old bushing from the knuckle. Measure the upper knuckle bore inside diameter at two locations. Always use a micrometer and a telescoping gauge when taking knuckle bore measurements. Some rounding of the top and bottom bore edges is acceptable.
3. Measure the bore in four positions and at two locations. The two locations must be 90 degrees opposite each other. Figure 5.3.
   - **If the average measurement is more than the knuckle bore maximum diameter specification in Table D:** Replace the knuckle.

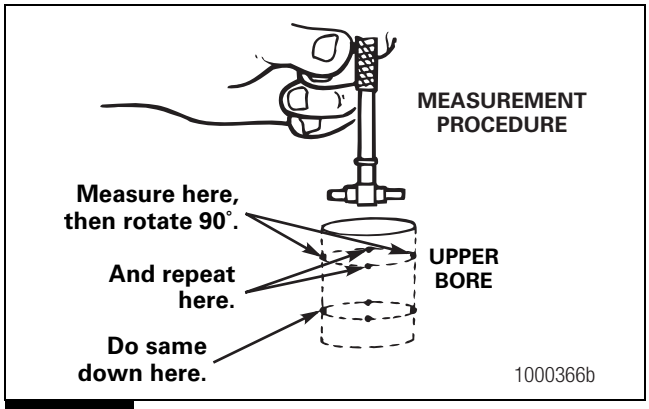

Figure 5.3

4. Repeat this procedure for measuring the lower knuckle bore. Figure 5.4 and Figure 5.5. Refer to the knuckle bore maximum diameter in Table D.
   - **If measurements at either the upper or lower knuckle bores exceed the knuckle bore maximum diameter in Table D:** Replace the knuckle.

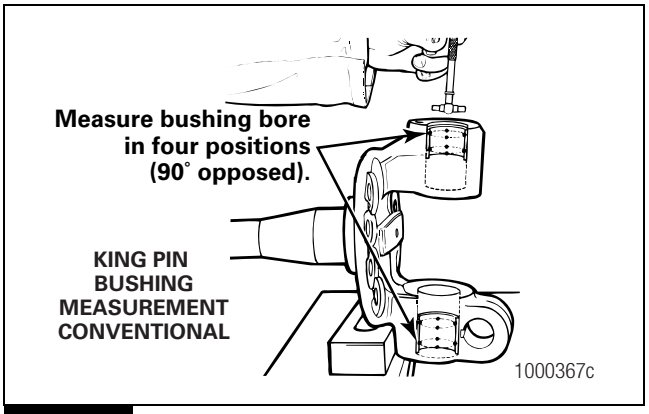

Figure 5.4

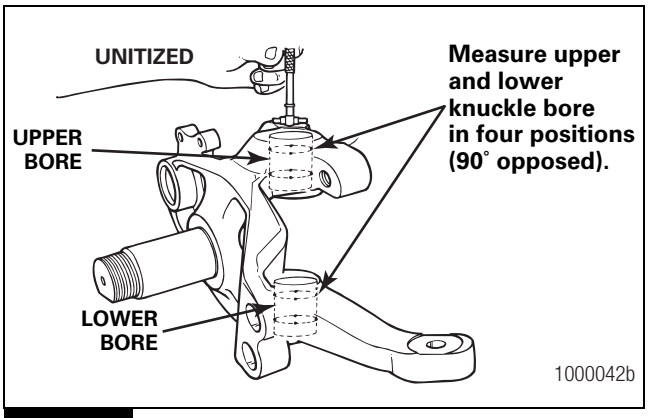

Figure 5.5

5. Measure the king pin bushing inside diameter using a micrometer and a telescoping gauge.
   - **If the average inside diameter measurement is greater than the king pin bushing maximum inner diameter in Table D:** Install a new bushing.
6. Measure the inner diameter of the new bushing after installation and reaming in four positions and at two locations. The two locations must be 90 degrees opposite each other. Figure 5.3.

- **If the average measurement is more than the king pin bushing maximum inner diameter specification in Table D:** Replace the bushing.

7. Measure the inner bore diameter of the axle beam. Rounding at the top and bottom of the beam is acceptable. Measure the axle beam bore at four positions and at two locations. Figure 5.3. Refer to the guidelines below.

   A. 0.5-inch (12.7 mm) below the top of the bore. Figure 5.6.

   B. 0.5-inch (12.7 mm) above the bottom of the bore. Figure 5.6.

   - **If the average measurement is greater than the axle beam bore maximum diameter in Table D:** Replace the entire axle beam. Obtain a new axle beam and install according to the instructions in Section 6.

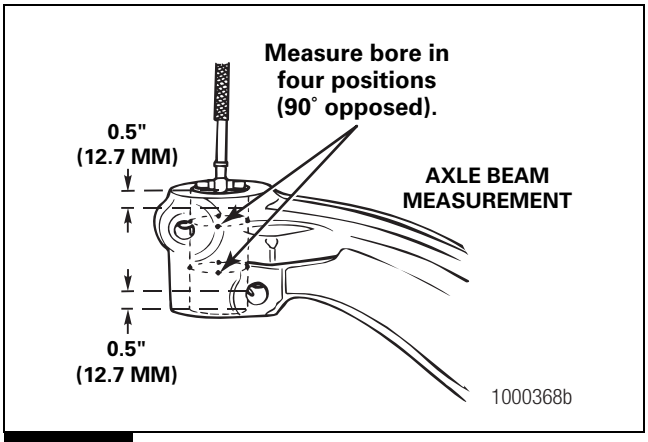

Figure 5.6

Table D: Axle Wear Limits Specifications

Model Number	Knuckle Bore Maximum Diameter	Axle Beam Bore Maximum Diameter	King Pin Bushing Maximum Inner Diameter
FC-901[1]			1.2400 in. (31.4960 mm)
FC-901[2]	1.3610 in. (34.569 mm)		1.2380 in. (31.4420 mm)
FC-903[1]		1.2380 in. (31.4450 mm)	1.2400 in. (31.4960 mm)
FC-903[2]			1.2380 in. (31.4420 mm)
FC-921	1.3615 in. (34.582 mm)		1.2365 in. (31.4070 mm)
FC-941	1.6295 in. (41.389 mm)	1.5040 in. (38.2020 mm)	1.5020 in. (38.1510 mm)
FD-901	1.5630 in. (39.700 mm)	1.4375 in. (36.5125 mm)	1.4380 in. (36.5250 mm)
FD-931	1.7360 in. (44.094 mm)	1.6110 in. (40.9194 mm)	1.6105 in. (40.9067 mm)
FD-933			
FD-961	1.9220 in. (48.818 mm)	1.7980 in. (45.6692 mm)	1.7960 in. (45.6180 mm)
FE-970	1.7360 in. (44.094 mm)	1.6110 in. (40.9194 mm)	1.6105 in. (40.9067 mm)

Model Number	Knuckle Bore Maximum Diameter	Axle Beam Bore Maximum Diameter	King Pin Bushing Maximum Inner Diameter
FF-921			
FF-931			
FF-932			1.7975 in. (45.6565 mm)
FF-933			
FF-934			
FF-941		1.7980 in. (45.6692 mm)	
FF-942			
FF-943			
FF-944			1.7960 in. (45.6180 mm)
FF-961			
FF-966			
FF-967	1.9220 in. (48.818 mm)		
FF-971		1.6105 in. (40.9067 mm)	1.6105 in. (40.9067 mm)
FF-981			
FF-982			
FF-983			1.7960 in. (45.6180 mm)
FF-984			
FF-986		1.7980 in. (45.6692 mm)	
FF-987			
FG-931			1.7975 in. (45.6565 mm)
FG-933			
FG-941			1.7960 in. (45.6180 mm)
FG-943			
FL-931			2.0030 in. (50.8767 mm)
FL-933			
FL-941	2.1270 in. (54.025 mm)	2.0030 in. (50.8762 mm)	2.0010 in. (50.8250 mm)
FL-943			
FL-951			2.0030 in. (50.8767 mm)
FU-910	2.1900 in. (55.626 mm)	2.0655 in. (52.4637 mm)	2.0645 in. (52.4383 mm)
FU-935			
MFS 6	1.3615 in. (34.582 mm)	1.2380 in. (31.4450 mm)	1.2365 in. (31.4070 mm)
MFS 7	1.6295 in. (41.389 mm)	1.5040 in. (38.2020 mm)	1.5020 in. (38.1510 mm)
MFS 8			

Model Number	Knuckle Bore Maximum Diameter	Axle Beam Bore Maximum Diameter	King Pin Bushing Maximum Inner Diameter
MFS 10			
MFS 12	1.9220 in. (48.818 mm)	1.7960 in. (45.6180 mm)	1.7980 in. (45.6692 mm)
MFS 13			
MFS 14			
MFS 16			
MFS 18	2.1270 in. (54.025 mm)	2.0030 in. (50.8762 mm)	2.0010 in. (50.8250 mm)
MFS 20			

[1] Knuckles with nylon bushings.

[2] Knuckles with bronze bushings.

Wheel Bearings

Axles with Conventional Wheel Ends

Inspect the wheel bearings when the hub is removed from the knuckle spindle.

Remove all lubricant from the bearings, knuckle, hub and hubcap.

Inspect the cup, the cone and the rollers and cage of all bearings. If any of the following conditions exist, you must replace the bearing.

- The center of the large diameter end of the rollers is worn level or below the outer surface. Figure 5.7.
- The radius at the large diameter end of the rollers is worn to a sharp edge. Figure 5.7.
- There is a visible roller groove in the cup or the cone inner race surfaces. The groove can be seen at the small or large diameter end of both parts. Figure 5.8.
- There are deep cracks or breaks in the cup, the cone inner race or the roller surfaces. Figure 5.8.
- There are bright wear marks on the outer surface of the roller cage. Figure 5.9.
- There is damage on the rollers and on the surfaces of the cup and the cone inner race that touch the rollers. Figure 5.10.
- There is damage on the cup and the cone inner surfaces that touch the rollers. Figure 5.11.

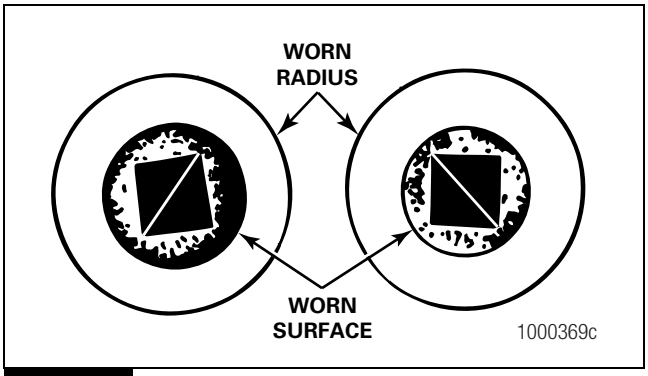

Figure 5.7

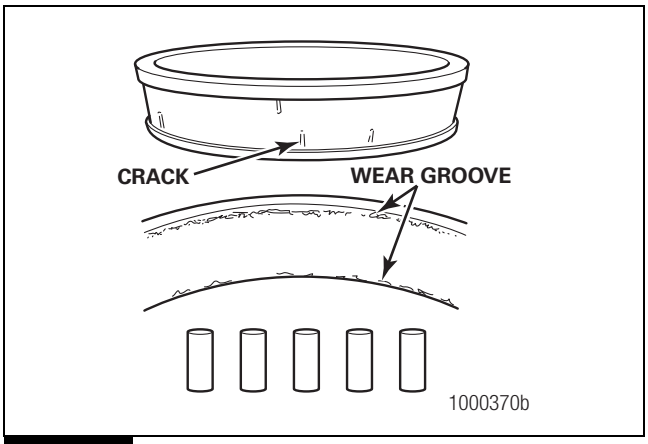

Figure 5.8

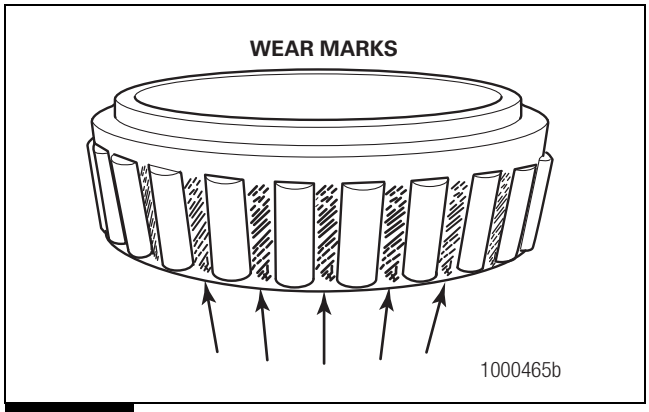

Figure 5.9

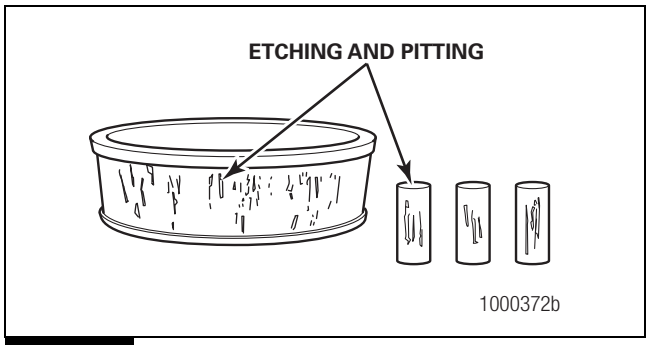

Figure 5.10

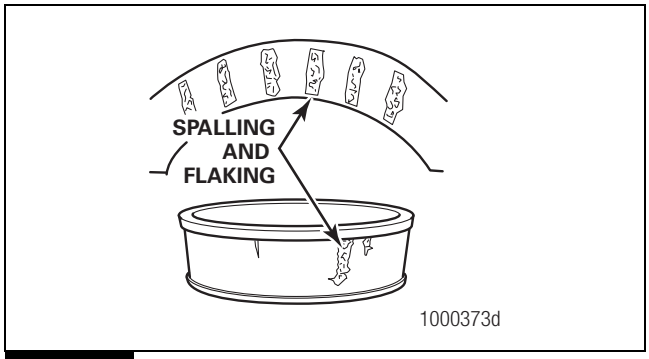

Figure 5.11

Tie Rod Grease Fittings

1. If a grease fitting is missing, install a new one. Do not install a fitting if the tie rod end is a non-greaseable design. Figure 5.12.

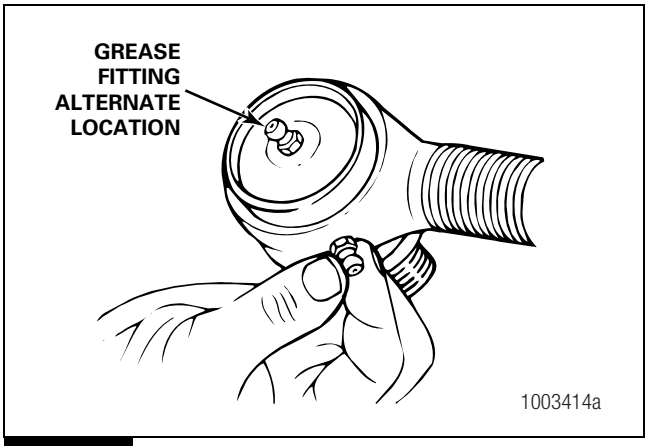

Figure 5.12

2. Tighten all grease fittings to 10 lb-ft (13.558 N•m). Figure 5.13.

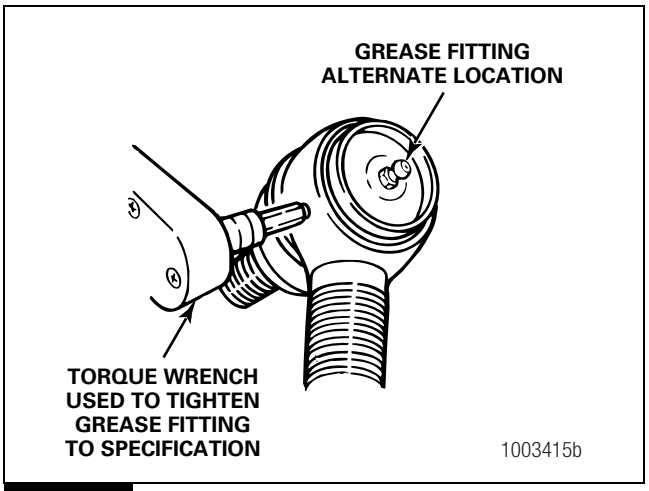

Figure 5.13

Hazard Alert Messages

Read and observe all hazard alert messages in this publication.

⚠ WARNING

To prevent eye injury, always wear eye protection when performing vehicle maintenance or service.

Installation

King Pin Bushings

NOTE: If the king pin bushings are being replaced, Meritor recommends replacing the bushings on BOTH sides of the axle at the same time.

Nylon Bushings — Axles with Conventional Wheel Ends

1. Insert the nylon bushing into each knuckle bore by hand. The entire outer surface of the nylon bushing must be in contact with the knuckle bore.
2. Check the nylon bushing installation before attempting to install the knuckle onto the axle beam.
3. Pass the king pin through the upper and lower bores. Each nylon bushing must be fully seated in the knuckle bore.
4. The bushing lube slots must align with the grease ports in the knuckle. Figure 6.1.

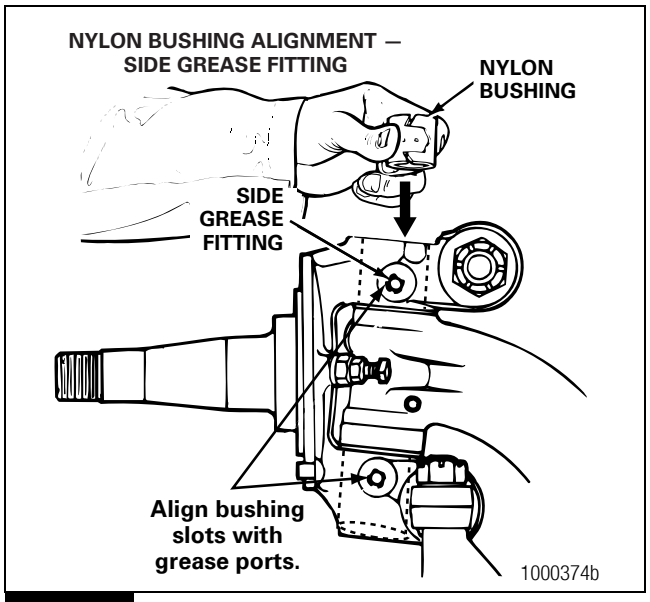

Figure 6.1

Bronze and Easy Steer King Pin Bushing Installation without a Press — Axles with Conventional and Unitized Wheel Ends

NOTE: For some axles you can install the bushings without a press. Use a bushing service kit to install and ream the bushings. Refer to Section 11.

Bronze and Easy Steer bushings have an interference fit in the knuckle bores and require a bushing installation tool. Refer to Section 11. To obtain this tool, refer to the Service Notes page on the front inside cover of this manual.

1. Place the new bushing into the upper knuckle bore. On MFS-7 and -8 front axles, the bushing hole must be aligned with the grease fitting hole in the knuckle bore. Figure 6.2.

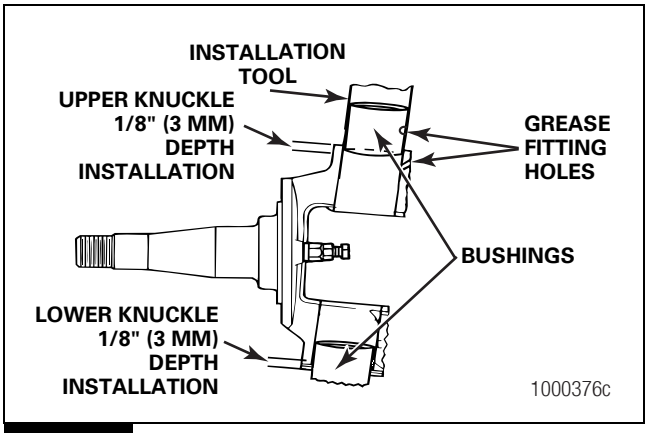

Figure 6.2

2. Assemble the tool as shown in Figure 6.3. Use the installlation tool to start the bushing 1/8-inch (3 mm) STRAIGHT into the upper bore. Figure 6.2. Complete the installation as described in Table E.

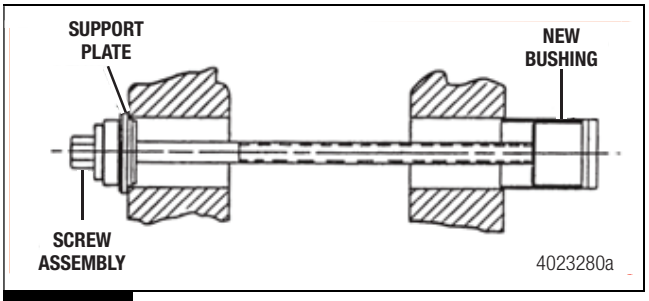

Figure 6.3

Table E: Bushing Installation and Depth Measurements

Illustration 1

OUTBOARD CLEARANCE MEASUREMENT

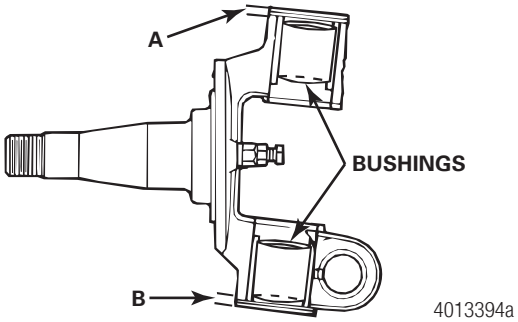

Press the bushing in to the specified depth as measured from the outboard flat of the knuckle ear.

Illustration 2

INBOARD CLEARANCE MEASUREMENT

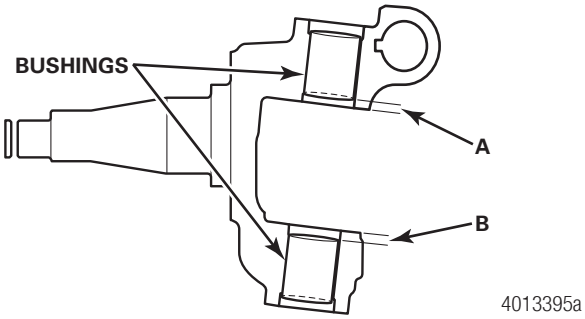

Press the bushing in to the specified depth as measured from the inboard internal milling of the knuckle ear.

NOTE: Ensure that the bushing grease fitting holes are aligned with the grease supply channel on the knuckles that utilize side mounted grease fittings.

Bushing Type	King Pin Cap Type	Axle Model/Series	Depth Measurement Reference	Top Bushing Depth A	Bottom Bushing Depth B
Easy Steer	Bolted On Caps	FF/FG	Illustration 1 — Outboard	0.352-0.382”	0.352-0.382”
		MFS12-MFS14[1]	Illustration 2 — Inboard	0.212”	0.550”
		FL	Illustration 2 — Inboard	0.135-0.165”	0.135-0.165”
		MFS16-23	Illustration 2 — Inboard	0.135-0.165”	0.135-0.165”
	Threaded Caps	MFS06, MFS07	Illustration 2 — Inboard	0.363-0.425”	0.145-0.208”
		MFS08	Illustration 1 — Outboard	0.514-0.554”	0.439-0.478”
		MFS10 MFS12-MFS14+[2]	Illustration 2 — Inboard	0.196-0.227”	0.535-0.565”
		MFS18-23	Illustration 2 — Inboard	0.135-0.165”	0.135-0.165”
		MFS12-14 with Integrated Tie Rod Arm	Illustration 2 — Inboard	0.25-0.27”* Some models may require depth adjustment. See note and Figure 6.4 on next page.	0.33-0.35”
Bronze	Bolted On Caps	All	Illustration 2 — Inboard	0.135-0.165”	0.135-0.165”

[1] If an "A" is the tenth character of the axle specification number.
[2] If a "B" or "C" is the tenth character of the axle specification number.

*NOTE: On some MFS12-14 knuckles with integral tie rod arms built prior to July 2019, it is possible that upon replacement of the king pin bushing, a portion of the grease hole will be covered by the bushing. Adjust bushing installation as necessary to ensure that more than 1/3 of the hole (top of the grease hole to the top of the bushing) is exposed above the bushing for proper grease flow. Figure 6.4.

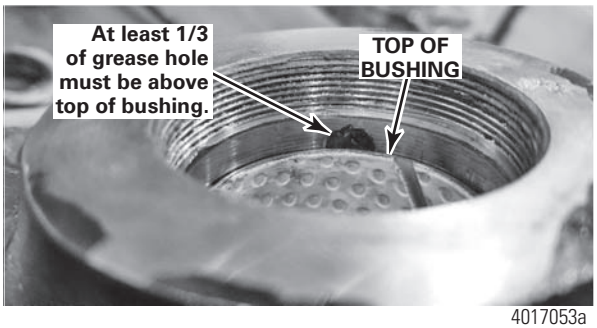

Figure 6.4

3. Turn the knuckle over so that the bottom of the knuckle is UP.
4. Place the new bushing into the lower knuckle bore. On MFS-7 and -8 front axles, the bushing hole must be aligned with the grease fitting hole in the knuckle bore. Figure 6.2.
5. Use the installation tool to start the bushing 1/8-inch (3 mm) STRAIGHT into the lower bore. Figure 6.2. Complete the installation as described in Table E.
6. Ream the bushings. Refer to procedure in this section.

Bronze and Easy Steer King Pin Bushing Installation with a Press — Axles with Conventional and Unitized Wheel Ends

1. Install the top king pin bushing first.

⚠ DANGER

Observe all hazard alerts provided by the press manufacturer to avoid death or serious personal injury.

2. Place the knuckle in a press with the top of the knuckle toward the top of the press. The top of the bores must be parallel to the top of the press.
3. Place the new bushing into the upper knuckle bore. On MFS-7 and -8 front axles, the bushing hole must be aligned with the grease fitting hole in the knuckle bore. Figure 6.2.
4. Use the installation tool to start the bushing 1/8-inch (3 mm) STRAIGHT into the upper bore. Release the pressure. Figure 6.2. Complete the installation as described in Table E.
5. Turn the knuckle over so that the bottom of the knuckle is UP. The bore must be parallel to the top of the press.
6. Place the new bushing into the lower knuckle bore. On MFS-7 and -8 front axles, the bushing hole must be aligned with the grease fitting hole in the knuckle bore. Figure 6.2.
7. Use the installation tool to start the bushing 1/8-inch (3 mm) STRAIGHT into the lower bore. Release the pressure. Figure 6.2. Complete the installation as described in Table E.
8. Ream the bushings. Refer to procedure in this section.

Ream the King Pin Bushings

Axles with Conventional and Unitized Wheel Ends — Bronze and Easy Steer Bushings

⚠ CAUTION

Use a fixed reamer to ream the king pin bushings. Do not hone or burnish the bushings. Damage to the bushings will result.

NOTE: Reamer tools are available from SPX Kent-Moore. Refer to Section 11. To obtain these tools, refer to the Service Notes page on the front inside cover of this manual.

1. Reaming procedure **MUST** be performed in vertical position. Place the knuckle in a vise with brass jaws.
2. Slide the pilot of the reamer through the top bushing until the reamer blades touch the bushing. Figure 6.5 and Figure 6.6.

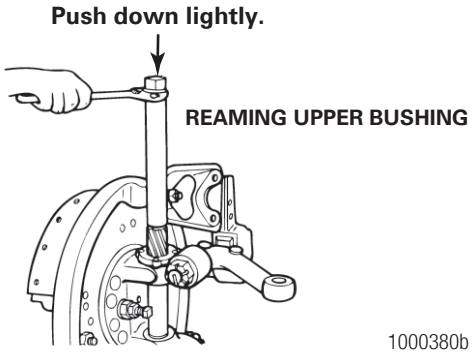

Figure 6.5

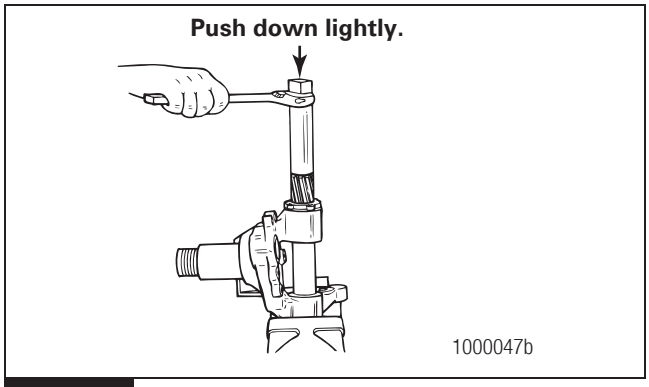

Figure 6.6

3. Rotate the reamer with a light DOWNWARD pressure. Do not apply too much force. Rotate the reamer smoothly.
   - Do not at any time turn the reamer counterclockwise as this will dull the cutting edges of the reamer.
   - When completing reaming, use leather glove to support reamer when it passes through bushing.
4. After cutting the top bushing, guide the reamer into the bottom bushing. Do not allow the tool to drop to the bottom bushing. Repeat Steps 2-3. Figure 6.7 and Figure 6.8.

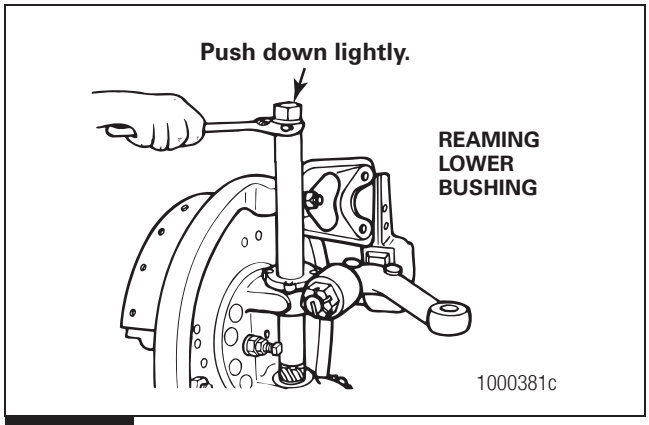

Figure 6.7

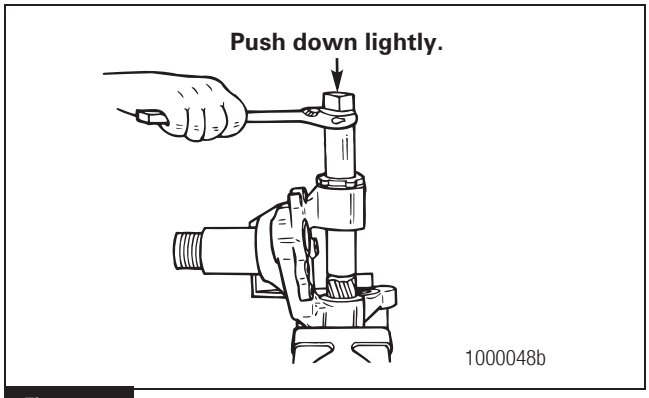

Figure 6.8

5. Slide the reamer out of the bottom bushing.
   - **If the reamer must be removed through the top bushing:** Rotate the tool in the opposite cutting direction.
6. Clean all material from the bushings.

Inner Knuckle Bore King Pin Seals

Axles with Conventional Wheel Ends

1. Place the top of the knuckle into a vise with brass jaws. The bottom of the knuckle must be TOWARD you.
2. Place the seal into the bottom of the top knuckle bore. The lip of the seal must be AWAY from the bore. Figure 6.9.

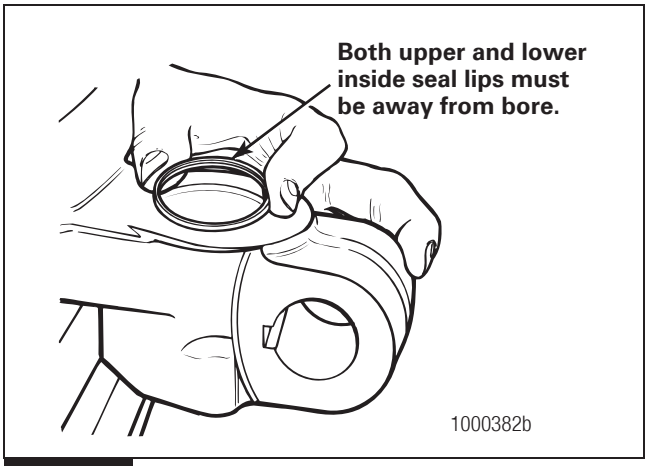

Figure 6.9

3. Place the end cap for the knuckle on top of the seal. Slide the king pin through the opposite knuckle bore. Use the king pin to install the seal. Figure 6.10.
   - **For bronze bushings:** The bottom of the seal must touch the bushing.
   - **For Easy Steer and nylon bushings:** The top of the seal must be even with the top of the knuckle. Figure 6.11.

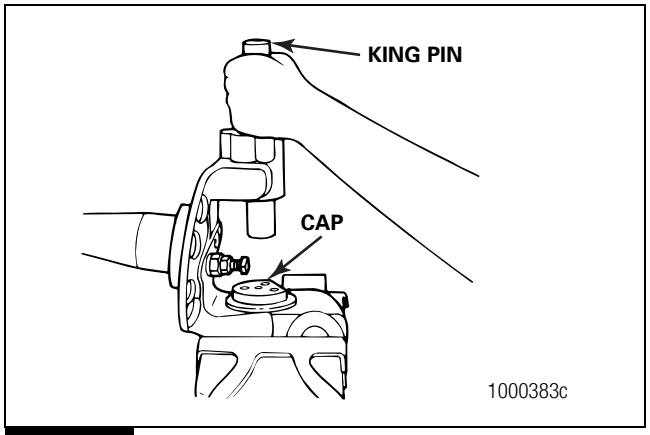

Figure 6.10

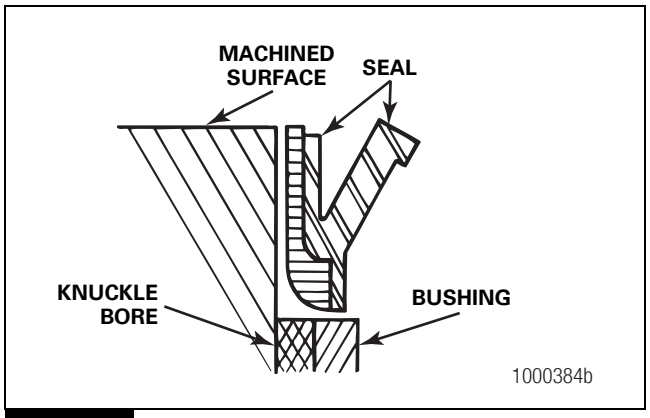

Figure 6.11

4. Turn the knuckle over in the vise. The jaws of the vise must hold the bottom of the knuckle, and the top of the knuckle must be toward you.
5. Place the seal into the top of the bottom knuckle bore. The lip of the seal must be AWAY from the bore. Figure 6.9.
6. Repeat Step 3 of this procedure.

Axles with Unitized Wheel Ends

1. Turn the knuckle OVER. Place the seal lightly into the inner bore. The seal lip must be AWAY from the bore. Figure 6.11 and Figure 6.12.

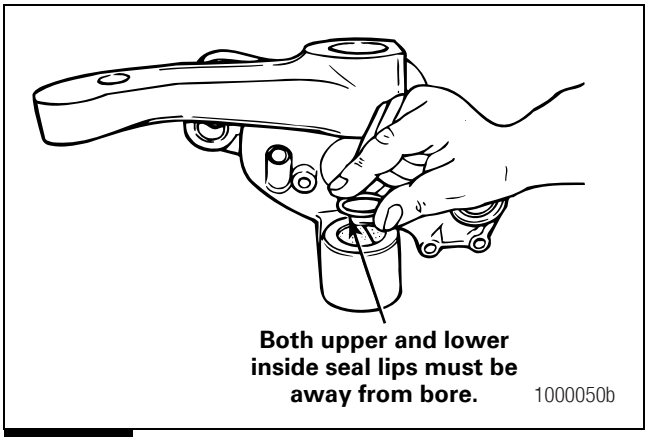

Figure 6.12

2. Use a seal installer tool to press the seal firmly into the knuckle bore. Figure 6.13.

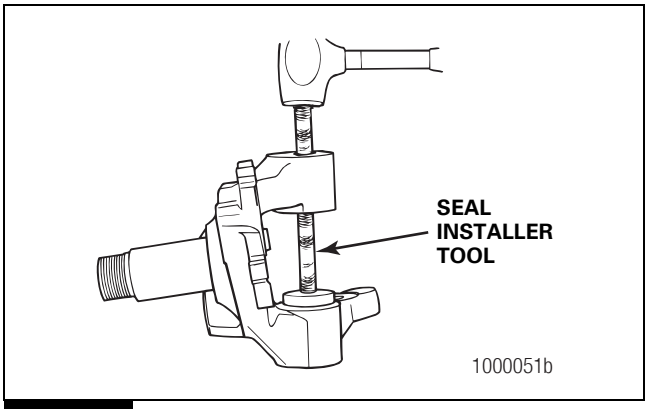

Figure 6.13

3. After installing the Easy Steer bushings, the top of the seal must be even with the inner machined surface of each knuckle bore. Figure 6.11.
4. Turn the knuckle over to the UP position. Place the seal lightly into the inner bore. The seal lip must be AWAY from the bore. Figure 6.11.
5. Use a seal installer tool to press the seal firmly into the knuckle bore. Figure 6.13. The top of the seal must be even with the inner machined surface of each knuckle bore. Figure 6.11.

Knuckle to the Axle Beam

⚠ WARNING

Use a brass or leather mallet for assembly and disassembly procedures. NEVER hit steel parts with a steel hammer. Pieces of a part can break off. Serious personal injury and damage to components can result.

Axles with Conventional Wheel Ends

1. Clean the bores of the knuckle and the axle beam.

NOTE: The one-piece thrust bearing with an integrated grease seal is completely interchangeable with the two-piece design. It has a specified top and bottom orientation.

2. Install the seal onto the thrust bearing. Figure 6.14. The surface with the inner diameter seal must be on the top. The surface with the outer diameter seal must be on the bottom. Figure 6.15.
   A. On cover-type seals: Install the seal over the open end of the bearing.
   B. On flat-type seals: Install the seal over the closed part of the bearing.

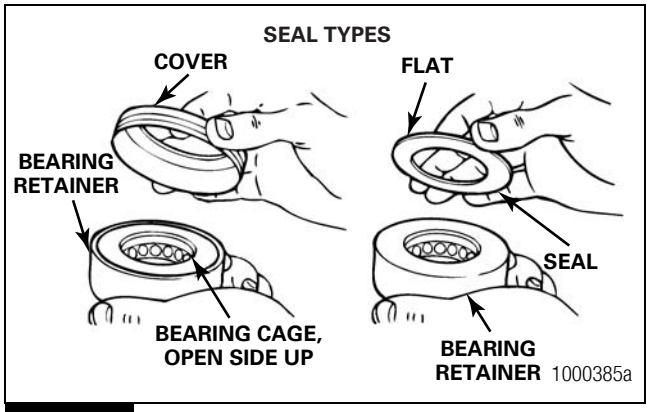

Figure 6.14

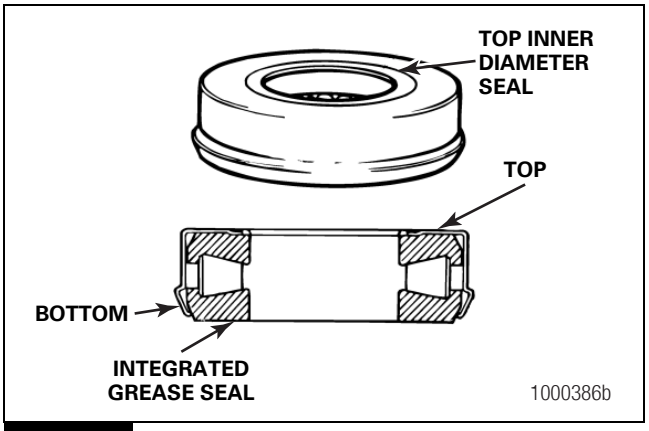

Figure 6.15

3. Install the seal and thrust bearing assembly on the inner knuckle. The seal must face UPWARD toward the beam. The top inner diameter will contact the bottom of the axle beam. Figure 6.16.

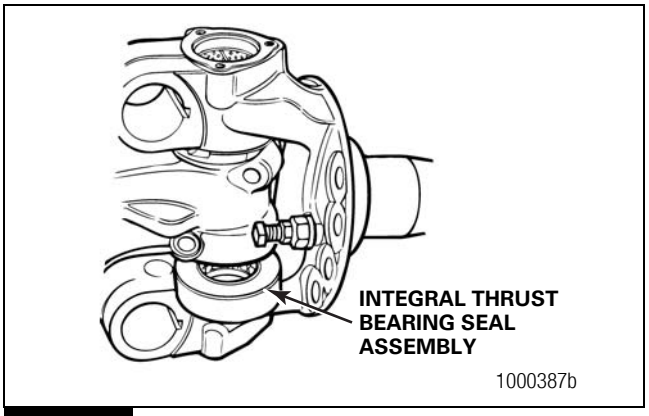

Figure 6.16

⚠ WARNING

Wear gloves when installing the shims. Shims have sharp edges that can cause serious personal injury.

4. Inspect the shims to see if they are bent, cracked or damaged before installation.
   A. Replace damaged shims with the same size shims, or in combination, that allow the least amount of knuckle end play.
   B. If a new shim pack is required, select the amount of shims that will give the least amount of end play.
5. After inspection, place the shims on top of the axle beam bore machined surface. Align the shims for king pin installation.

6. Place the knuckle onto the axle beam.
7. Place a pry bar between the steering arm boss and the axle beam. Lift the knuckle and slide the shim pack between the top of the beam and the knuckle. Figure 6.17.

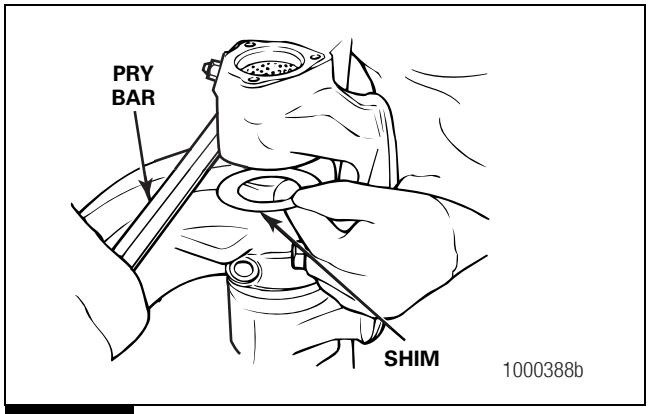

Figure 6.17

8. Align all the bores. If the bores are not aligned, the parts will be damaged when the king pin is installed.
9. Remove the pry bar.
10. Before installing the king pin into the top of the knuckle, apply the multi-purpose grease onto the bottom half of the king pin.
11. Verify that you can see the word "TOP," which is stamped on the king pin. Figure 6.18.

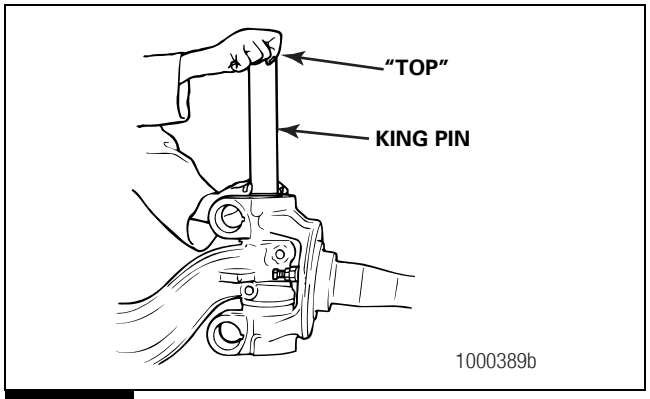

Figure 6.18

12. Rotate the king pin so that the two draw key slots of the pin correctly align with the draw key slots in the knuckle.
13. Install the king pin into the TOP of the knuckle and through the area where the shims are located. Do not force the pin through the top bushing.
14. If required, use a hammer and a brass drift to apply direct force to the king pin for seating it into the lower knuckle bore.
15. Seat the top draw key into the front of the beam. Refer to Table F. Seat the bottom draw key into the back of the beam by striking it with a hammer and drift. The keys must align with the slots of the king pin. Do not install or tighten the locknuts before checking the knuckle end play. Figure 6.19.

Table F: Threaded or Plain Draw Keys

Threaded Draw Keys	Plain Draw Keys
All other axle models	FC-901, FC-921, FE-970, FF-971 and FL-901

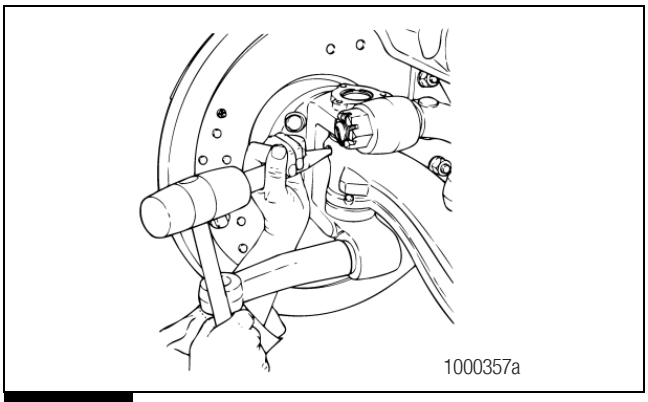

Figure 6.19

Axles with Unitized Wheel Ends

1. Clean the bores of the knuckle and axle beam.

⚠ WARNING

Wear gloves when installing the shims. Shims have sharp edges that can cause serious personal injury.

2. Inspect the shims to see if they are bent, cracked or damaged before installation.
   A. Replace damaged shims with same size shims, or in combination, that allow the least amount of knuckle end play.
   B. If a new shim pack is required, select the amount of shims that will give the least amount of end play.
3. After inspection, place the shims on top of the axle beam bore machined surface. Align the shims for king pin installation. Figure 6.20.

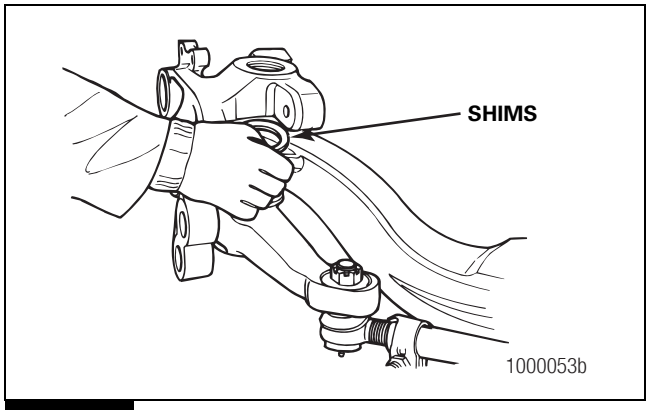

Figure 6.20

4. Place the knuckle onto the axle beam.

NOTE: The one-piece bearing with an integrated grease seal is completely interchangeable with the two-piece design. It has a specific top and bottom orientation.

5. Slide the thrust bearing and seal assembly between the bottom knuckle bore and the bottom of the axle beam. The surface with the inner diameter seal must be on the top. The surface with the outer diameter seal must be on the bottom. Figure 6.21 and Figure 6.22.
   - The shims must not move out of position above the axle beam bore.
   - The integral thrust bearing seal assembly must be positioned with the inner diameter seal on top and the flanged bottom down.
   - All the bores must be aligned with the king pin area. If the bores are not aligned, the parts will be damaged when the king pin is installed.

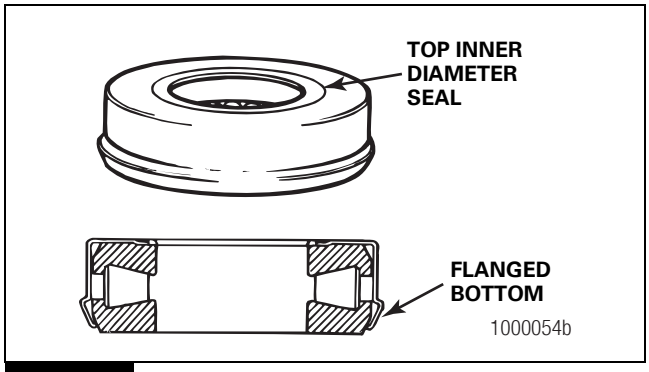

Figure 6.21

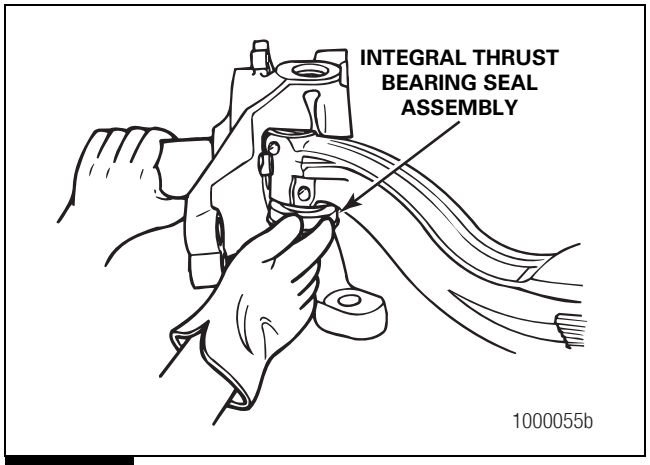

Figure 6.22

6. Before installing the king pin into the top of the knuckle, apply the multi-purpose grease onto the bottom half of the king pin.
7. Verify that you can see the word “TOP,” which is stamped on the king pin. Figure 6.23.

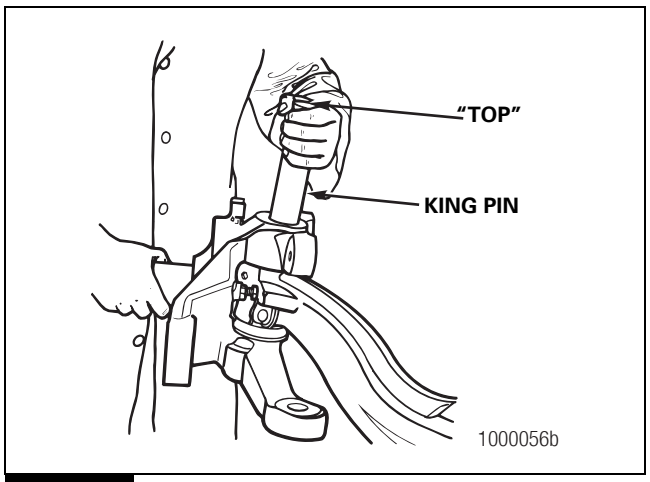

Figure 6.23

8. Rotate the pin so that the two draw key slots of the pin correctly align with the draw key holes in the knuckle.
9. Install the king pin into the top of the knuckle and through the area where the shims are located.
10. Use a hammer and a brass drift to apply direct force to the king pin for seating it into the lower knuckle bore.
11. Seat the top draw key into the front of the beam. Seat the bottom draw key into the back of the beam by striking it with a hammer and drift. The keys must align with the slots of the king pin. Do not install or tighten the locknuts.
12. Check the knuckle end play. Refer to procedure in this section.

Check Steer Knuckle Vertical End Play

Table G: End Play Specifications

Axle	Specification
Rebuilt Axles	0.001-0.010-inch (0.025-0.254 mm)

Axles with Conventional Wheel Ends

1. Strike the boss of the knuckle with a rubber mallet to move the parts into position. Figure 6.24.

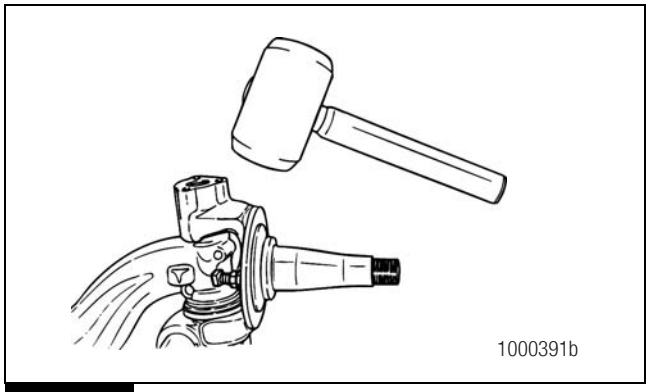

Figure 6.24

2. Turn the knuckle to the straight-ahead position.
3. Attach a dial indicator. Place the base onto the knuckle. Place the tip onto the center of the king pin. Set the dial indicator to ZERO. Figure 6.25.

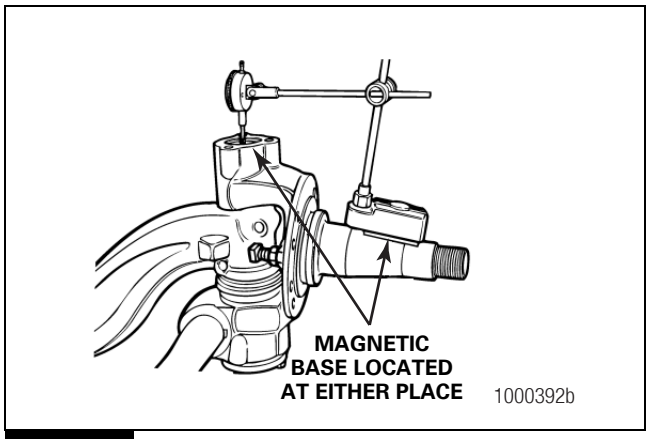

Figure 6.25

4. Use one of the following methods to measure the end play.
   - Place a pry bar between the knuckle and the top of the axle center. Push the knuckle up and measure the end play. Figure 6.26.
   - Place a block of wood and a hydraulic jack under the bottom of the knuckle. Raise the knuckle until the pointer on the dial indicator stops. Figure 6.27.

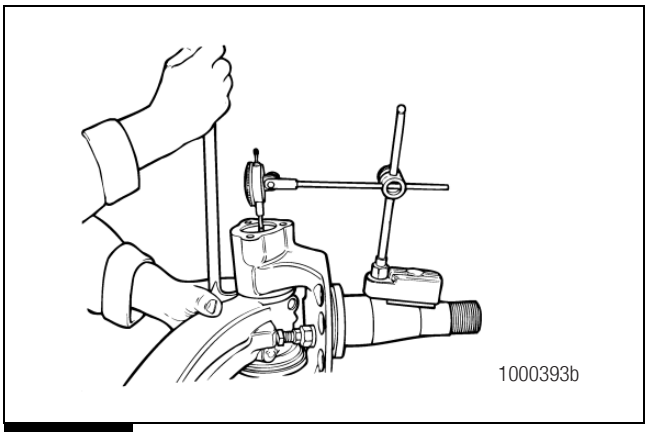

Figure 6.26

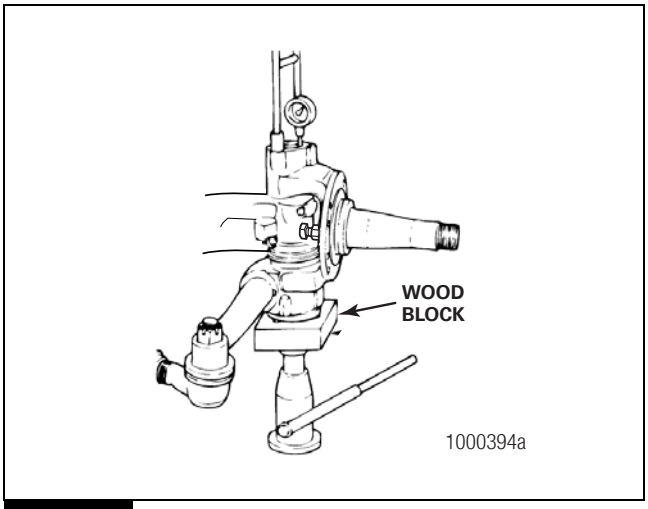

Figure 6.27

5. Repeat Steps 3-4 with the axle in the full RIGHT and full LEFT positions.
6. Record the reading on the dial indicator. If adjustment to the shim pack is needed (see below) reverse the assembly steps to access the shim pack. Add/remove shim(s) as needed. Reassemble and recheck the end play.
   - **If the knuckle binds or ZERO end play is measured:** Remove shim(s) from the shim pack.
   - **If the reading is more than the correct specification shown in Table G:** Add shim(s) to the shim pack.

Axles with Unitized Wheel Ends — Curbside Knuckle End Play

1. Turn the wheels to the STRAIGHT position. Secure the dial indicator base onto the axle beam.
2. Place the dial indicator tip onto the upper king pin cap.
3. Place a jack and a wood block, with a hole that allows clearance for the lower king pin grease fitting, under the lower king pin cap area.
4. Set the dial indicator to ZERO.
5. Raise the jack until the axle beam is slightly raised from the safety stands. Measure and record the dial indicator reading. Figure 6.28.

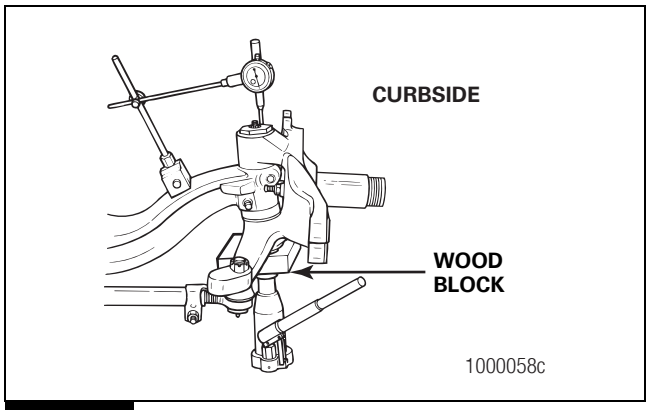

Figure 6.28

Axles with Unitized Wheel Ends — Driver Side Knuckle End Play

1. Turn the wheels to the STRAIGHT position. Remove the king pin cap.
2. Install a dial indicator with the base on the steering arm. Place the dial indicator tip onto the exposed king pin top.
3. Set the dial indicator to ZERO.
4. Raise the jack until the axle beam is slightly raised from the safety stands. Measure and record the dial indicator reading. Figure 6.29.
   - **If the end play is within allowable specifications shown in Table G:** Install the draw key lock nuts.
   - **If the reading is ZERO:** Excessive stress is placed on the bearing. Remove the knuckle and remove shims from the shim pack. Determine a thinner shim pack.
   - **If the reading is more than the correct end play specifications shown in Table G:** Remove the knuckle. Add shims to the shim pack.

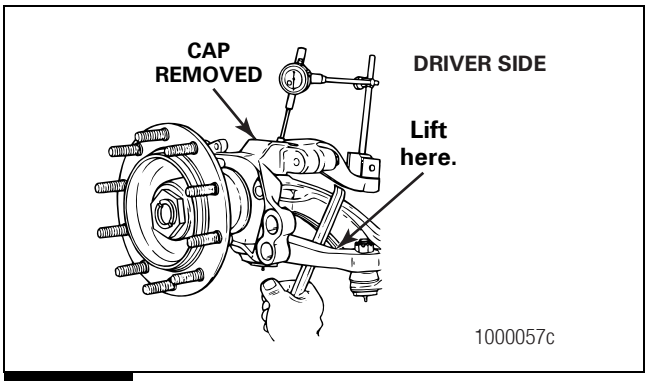

Figure 6.29

Draw Key Lock Nuts

⚠ WARNING

Use a brass or leather mallet for assembly and disassembly procedures. NEVER hit steel parts with a steel hammer. Pieces of a part can break off. Serious personal injury and damage to components can result.

⚠ CAUTION

Verify that the draw key is installed completely or the lock nut is tightened to 30-45 lb-ft (41-61 N•m). If not installed correctly, the king pin and the axle beam will be damaged.

Table H identifies the axles equipped with plain draw keys.

Table H: Threaded or Plain Draw Keys

Threaded Draw Keys	Plain Draw Keys
All other axle models	FC-901, FC-921, FE-970, FF-971 and FL-901

Plain Draw Keys — Axles with Conventional and Unitized Wheel Ends

Use a hammer and a brass drift to install the draw key into the axle beam and knuckle. The key must be installed 1/32-1/8-inch (1-3 mm) below the outer surface of the beam. Figure 6.30.

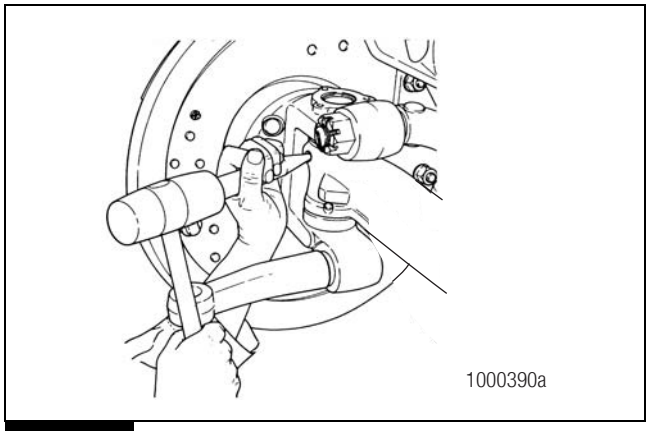

Figure 6.30

Threaded Draw Keys — Axles with Conventional and Unitized Wheel Ends

Install the lock nut and tighten it to 30-45 lb-ft (41-61 N•m). Figure 6.31 and Figure 6.32.

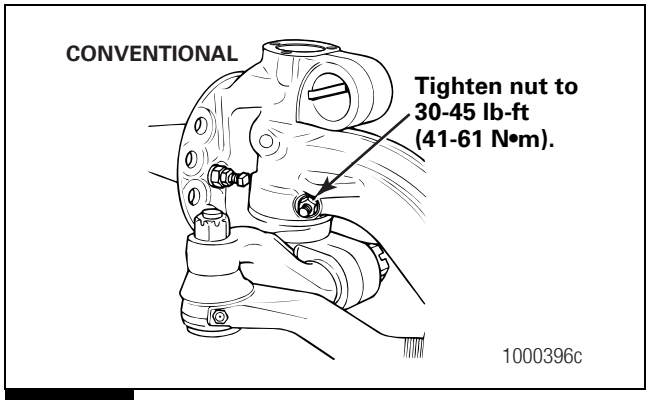

Figure 6.31

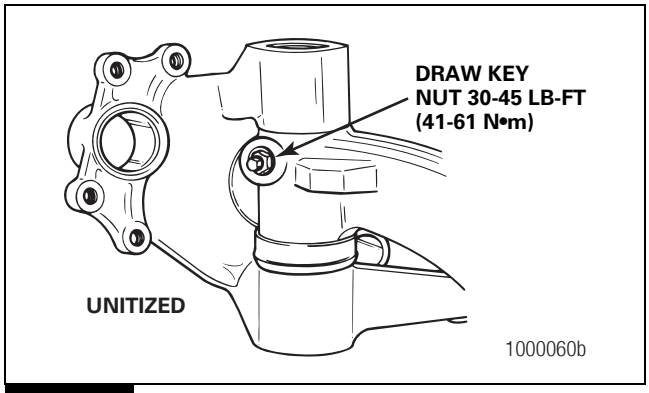

Figure 6.32

King Pin Caps

Bolt-On King Pin Caps

1. Install new gaskets and the caps onto the top and the bottom of the knuckle. Install the capscrews and the washers and tighten to 20-30 lb-ft (28-40 N•m). Figure 6.33.

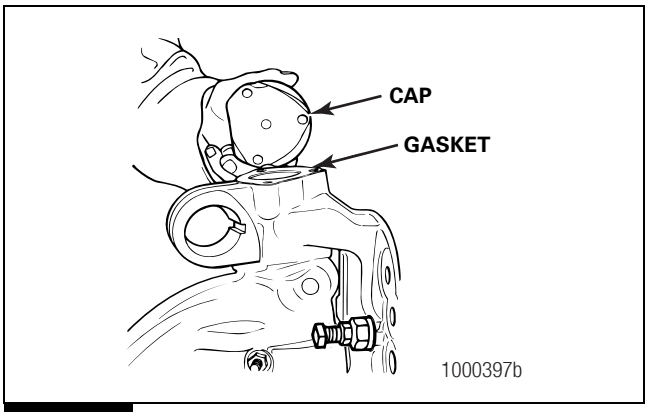

Figure 6.33

2. Connect the tie rod arm to the knuckle. Refer to procedure in this section.

Threaded King Pin Caps

⚠ WARNING

When applying some silicone gasket materials, a small amount of acid vapor is present. To prevent serious personal injury, ensure that the work area is well-ventilated. Read the manufacturer's instructions before using a silicone gasket material, then carefully follow the instructions. If a silicone gasket material gets into the eyes, follow the manufacturer's emergency procedures and get checked by a physician as soon as possible.

1. Apply the sealant, part number 2297-D-7076, onto the threads. To obtain these supplies, refer to the Service Notes page on the front inside cover of this manual.
2. Install the threaded king pin caps onto the top and the bottom of the knuckle.
3. Tighten the king pin caps to 70-90 lb-ft (95-120 N•m). Figure 6.34.

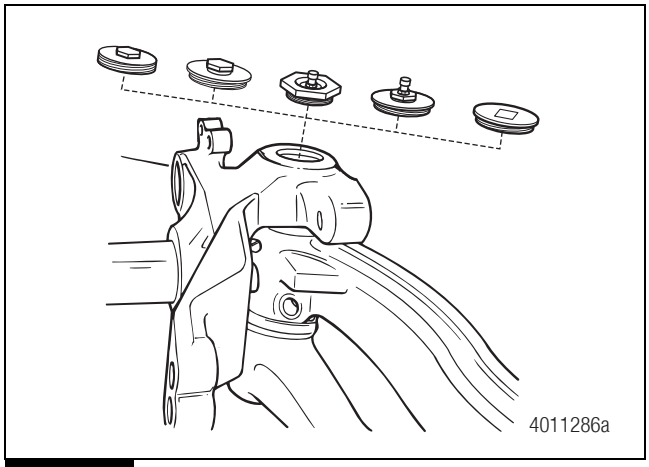

Figure 6.34

4. Connect the tie rod end assembly to the integral knuckle arm. Refer to procedure in this section.

Steering Arm

Axles with Keyed Steering Arm

1. Press the key into the slot in the arm. Install the steering arm into the knuckle. Figure 6.35.

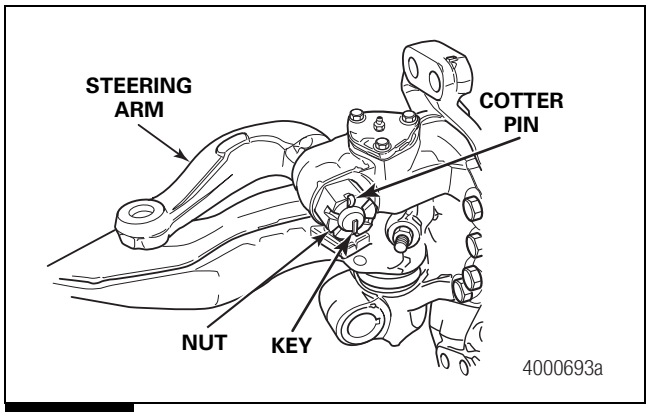

Figure 6.35

2. Install the nuts. Tighten to the specified torque. Refer to Section 10.
3. Install the cotter pins. If necessary, tighten the nut until the holes are aligned. Do not loosen the nut to install the cotter pin.

MFS Axles with Bolt-On, Integrated Steering and Tie Rod Arm Assemblies

1. Mount the integrated steering and tie rod arm assembly onto the four brake spider retaining capscrews that extend through the lower knuckle holes. Figure 6.36.

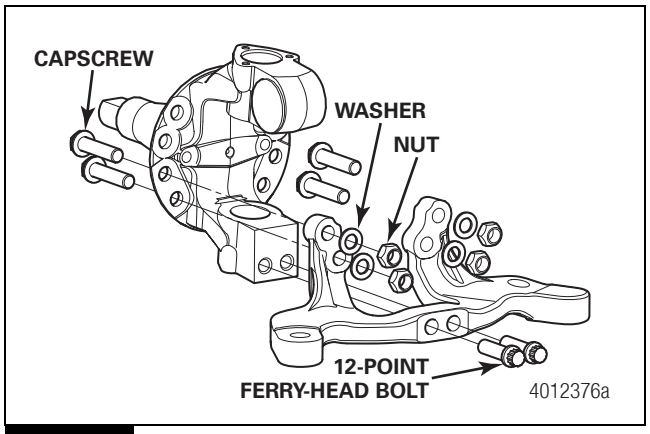

Figure 6.36

2. Install the four washers and nuts and hand tighten.
3. Install the two 12-point Ferry-head bolts through the integrated steering and tie rod arm assembly into the knuckle and hand tighten.
4. Tighten the four nuts to 390-450 lb-ft (530-610 N•m).
5. Tighten the two 12-point Ferry-head bolts to 310-400 lb-ft (420-542 N•m).
6. Install the cross tube assembly tie rod end into the tapered hole in the integrated steering and tie rod arm assembly.
7. Install the castle nut and tighten to 160-300 lb-ft (217-406 N•m).
8. Install the cotter pin. If necessary, tighten the nut until the holes are aligned. Do not loosen the nut to install the cotter pin.

Axles with Bolt-On Steering Arm

⚠ WARNING

Take care when using Loctite® adhesive to avoid serious personal injury. Read the manufacturer's instructions before using this product. Follow the instructions carefully to prevent irritation to the eyes and skin. If Loctite® adhesive material gets into the eyes, follow the manufacturer's emergency procedures and get checked by a physician as soon as possible.

1. Use a wire brush to remove old Loctite® adhesive from capscrew bolts and internal threads of the knuckle. Reapply Meritor specification 2297-C-7049 liquid adhesive or Loctite® 680 adhesive. At least half of the thread area must be covered.
2. Insert the bolts through the steering arm. Hand-start the bolts into the knuckle assembly. Figure 6.37.
3. Tighten the arm bolts to the following specification.
   - **MFS-6 axles:** 215-265 lb-ft (290-360 N•m)
   - **MFS-7 or MFS-8 axles:** 360-470 lb-ft (490-638 N•m)
   - **All other axles:** 300-450 lb-ft (406-610 N•m)

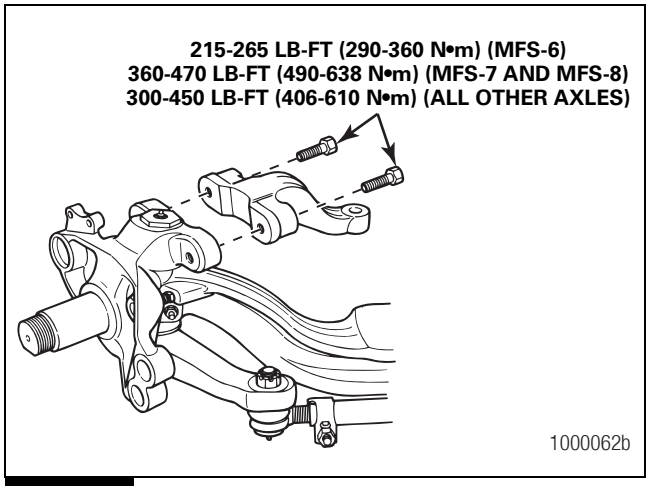

Figure 6.37

Install the Tie Rod Ends Into the Cross Tube

NOTE: The cross tube has right-hand threads on the right side of the vehicle and left-hand threads on the left side of the vehicle.

The replacement cross tube must be the same length and diameter as the original tube. Use the thread count as a guide. Install the tie rod ends into the threaded cross tube ends to the approximate depth marked during the tie rod assembly removal. Figure 6.38.

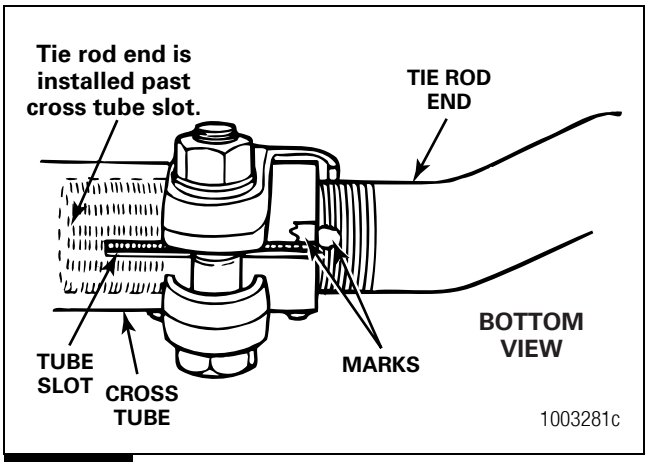

Figure 6.38

If you are installing new tie rod ends, thread the tie rod ends to the approximate original depth inside the cross tube. Figure 6.39.

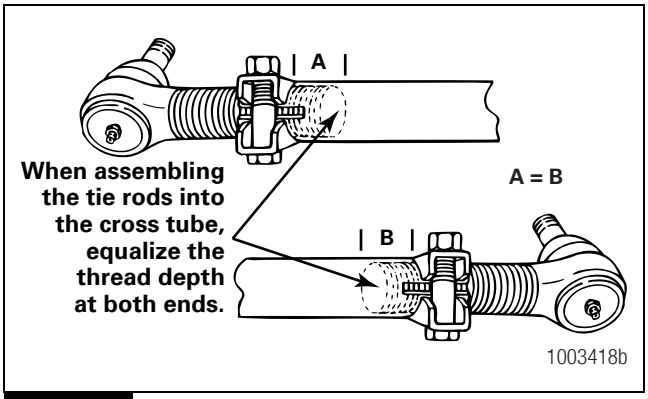

Figure 6.39

Both tie rod ends must be installed into the cross tube deeper than the end of the cross tube slot. Figure 6.38.

1. Verify that the tab on the clamp, when available, is firmly seated against the end of the cross tube. Otherwise, verify the clamp-guiding female emboss seats into the tube male emboss.
2. Install the nuts and the bolts into the clamps. Tighten to the specified torque. Refer to Section 10.
   - **If the tab on the clamp is tack-welded:** Do not remove the tack weld. If you remove the tack weld, you will reduce the clamping force.

Tie Rod Arms, Tie Rod Ends and Cross Tube Assembly

Axles with Removable Tie Rod Arms

NOTE: For MFS axles with bolt-on, integrated steering and tie rod arm assemblies, refer to the steering arm installation procedure to install the tie rod arms.

NOTE: If a different size tie rod arm is installed, the steering geometry is changed and may cause tire wear. Contact the Meritor OnTrac™ Customer Call Center at 866-OnTrac1 (668-7221).

1. Press the key into the slot in the arm. Install the tie rod arm into the knuckle. Figure 6.40.

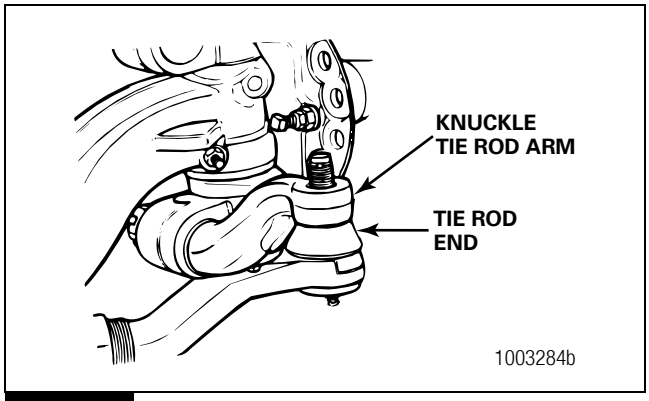

Figure 6.40

2. Install the nut onto the tie rod arm. Tighten to the specified torque. Refer to Section 10.
3. Install the cotter pins. If necessary, tighten the nut slightly, increasing the final torque value until the holes are aligned. Do not loosen the nut to install the cotter pin.

NOTE: The cross tube has right-hand threads on one end and left-hand threads on the other end.

4. If removed, install the tie rod ends into the cross tube to the position marked during removal. Figure 6.41. Thread the ends equally into the cross tube to the required length. The threaded portion of the tie rod end must be installed into the cross tube beyond the end of the slot.

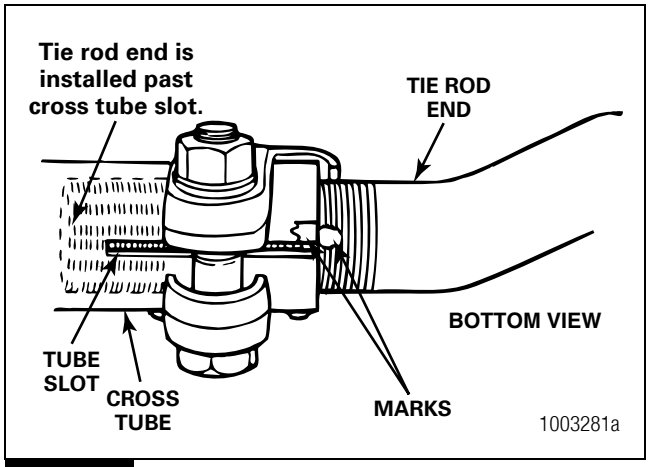

Figure 6.41

5. Install the nuts and the bolts into the clamps. The clamp tab, when available, must be firmly seated against the cross tube. Figure 6.42. Otherwise, the clamp-guiding female emboss must be seated into the tube male emboss. Figure 6.43, Figure 6.44 and Figure 6.45. Tighten to the specified torque. Refer to Section 10.

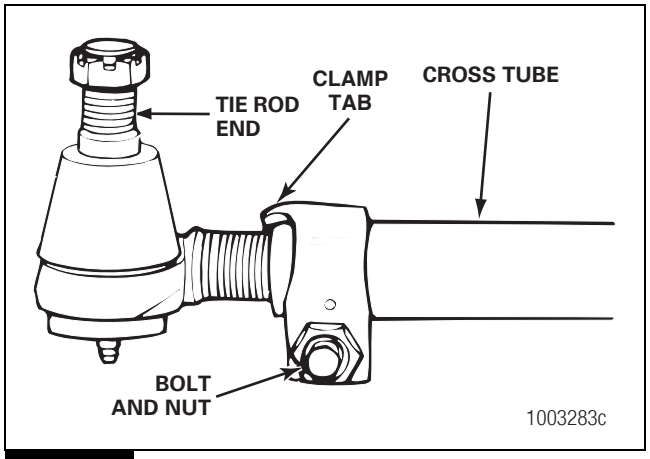

Figure 6.42

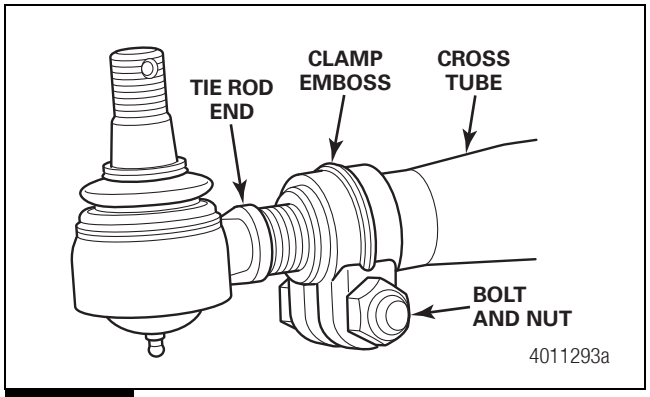

Figure 6.43

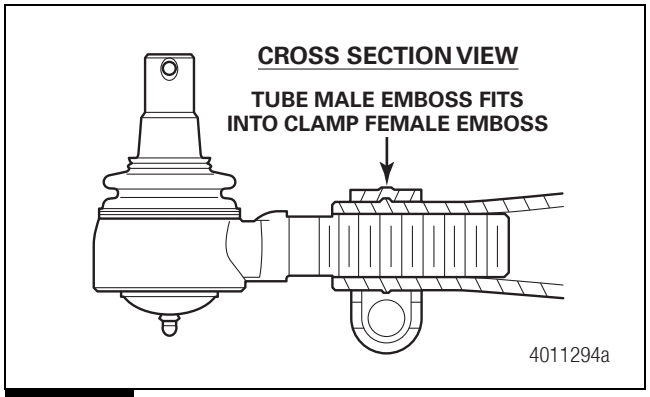

Figure 6.44

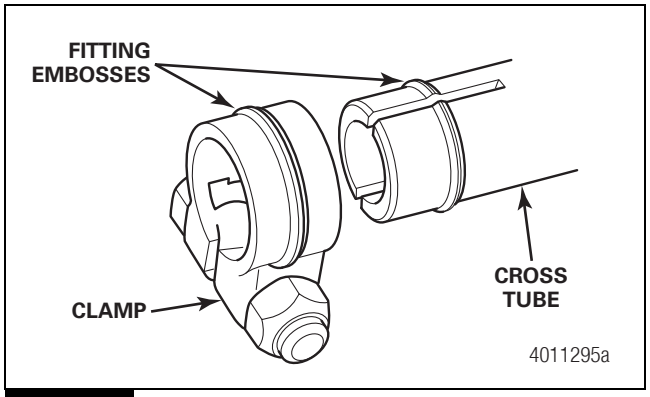

Figure 6.45

6. Check the tie rod boot for cracks, tears or other damage. Also check the boot seals for damage. Replace the entire tie rod end if the boot is damaged or missing.
7. Clean and dry the tie rod taper and the tie rod arm taper hole.
8. Install the tie rod ends into the tie rod arms. Install the castle nuts onto the tie rod ends. Tighten the castle nuts to the specified torque. Refer to Section 10.
9. Install the cotter pins. If necessary, tighten the nut until the holes are aligned. Do not loosen the nut to install the cotter pin.
10. Check and, if necessary, adjust the toe. Refer to Section 7.

Cross Tube and Tie Rod Ends

Axles with Integral Tie Rod Arms

NOTE: The cross tube has right-hand threads on one end and left-hand threads on the other end.

1. If the tie rods have been removed, reinstall the tie rod ends into the cross tube to the position marked during removal. Thread the ends equally into the cross tube to the required length. Figure 6.46.

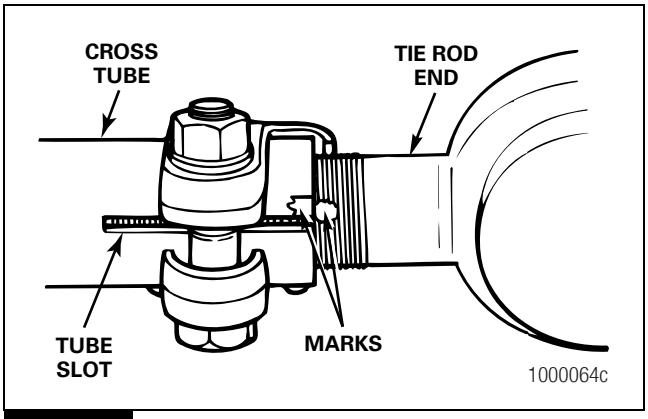

Figure 6.46

2. Install the nuts and the bolts into the clamps. The clamp tab, when available, must be firmly seated against the cross tube. Figure 6.42. Otherwise, the clamp-guiding female emboss must be seated into the tube male emboss. Figure 6.43, Figure 6.44 and Figure 6.45. Tighten the nut to the specified torque. Refer to Section 10.
3. Clean and dry the tie rod end taper and the tie rod arm taper hole. Figure 6.47.

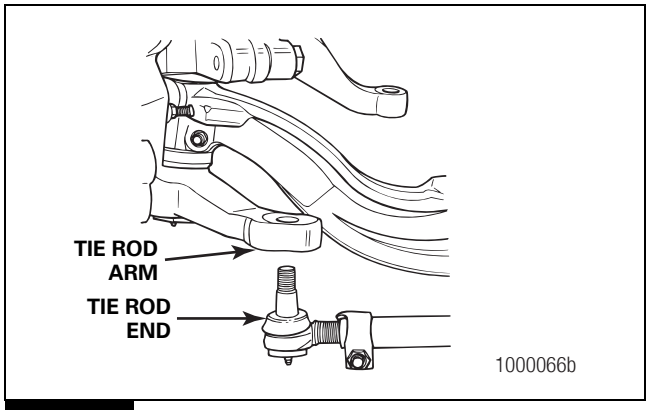

Figure 6.47

4. Install the tie rod ends into the tie rod arms. Install the castle nuts onto the tie rod ends. Tighten the castle nuts to the specified torque. Refer to Section 10.
5. Install the cotter pins. If necessary, tighten the nut until the holes are aligned. Do not loosen the nut to install the cotter pin.
6. Check and, if necessary, adjust the toe. Refer to Section 7.

Replace the Studs on a Unitized Wheel End

⚠ DANGER

Ensure that the stud threads are not damaged during installation procedures. Damaged threads will not allow the stud to provide the required clamp to support the wheel retention system. The wheels can loosen and separate from the vehicle. Death or serious personal injury can result.

⚠ WARNING

Do not use a hammer to remove or install studs. A hammer can cause impact damage to the bearing raceway, which will reduce bearing life. Serious personal injury and damage to components can result.

NOTE: These procedures apply to axles with a barrel spindle, integral tie rod arms and sealed hub units.

If a stud is stripped and needs replacement, use one of the following procedures.

Preferred Method — Replacing Studs with the Hub Installed on the Vehicle

⚠ DANGER

Park the vehicle on a level surface. Block the wheels to prevent the vehicle from moving. Support the vehicle with safety stands. NEVER work under a vehicle supported only by jacks. Jacks can slip and fall over. Failure to use safey stands can result in death or serious personal injury and damage to components.

1. Park the vehicle on a level surface. Block the wheels to prevent the vehicle from moving.
2. Raise the vehicle so that the front wheels are off the ground. Support the vehicle with safety stands.
3. Mark the wheel and hub relationship. Remove the wheel and tire assembly. Use a paint stick to mark the wheel studs you are removing. Figure 6.48. Do not reuse the studs.

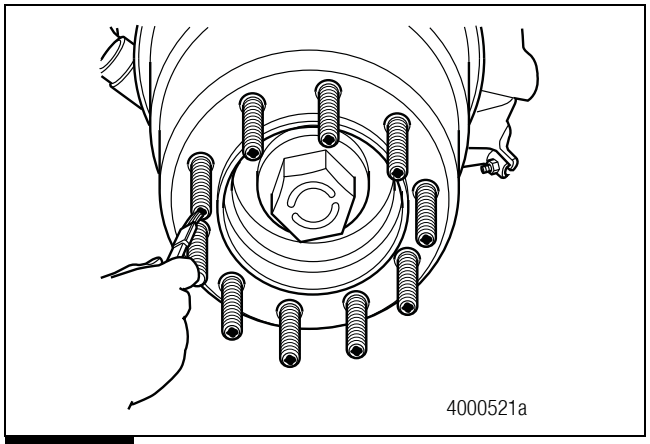

Figure 6.48

4. If necessary, back off the brake at the slack adjuster until the brake shoes retract and the drum clears the linings. Figure 6.49.

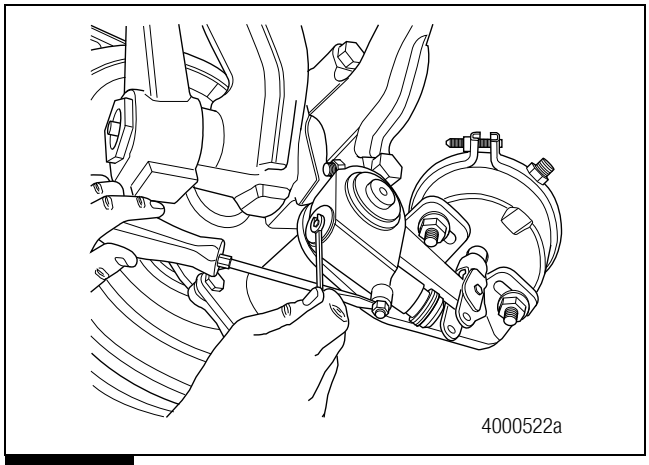

Figure 6.49

5. Remove the brake drum. Figure 6.50.

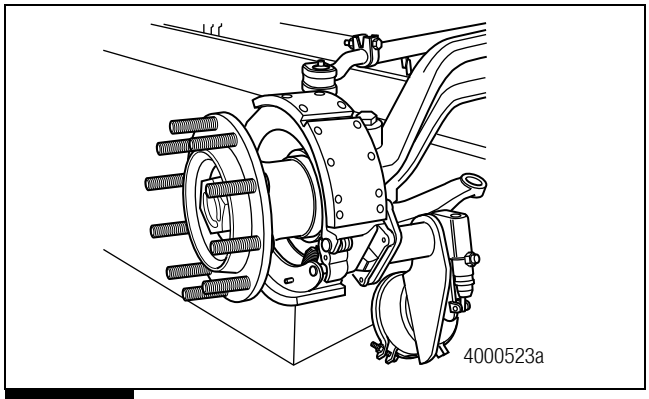

Figure 6.50

6. Use a 1/2-inch (12.7 mm) drive impact wrench and a ball joint removal kit to remove the studs. Figure 6.51.

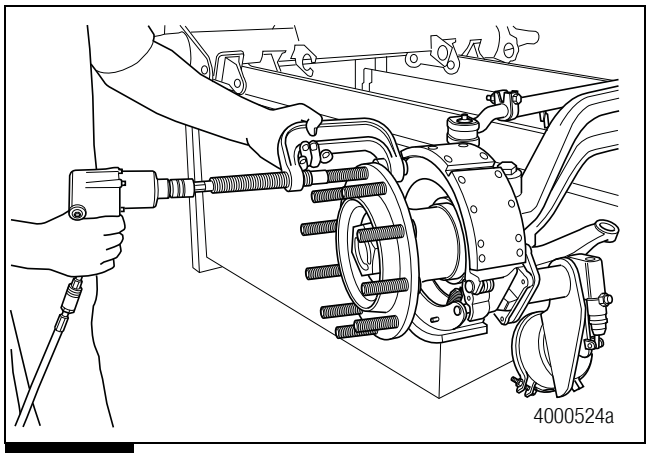

Figure 6.51

7. Use a crocus cloth to clean all the flat surfaces on the wheel and hub.

8. Position the new studs into the hub. Align the stud knurls with the impressions in the hub stud hole. Figure 6.52.

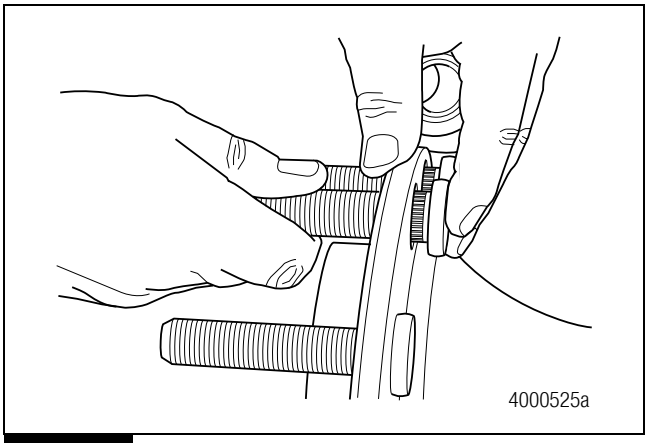

Figure 6.52

⚠ WARNING

Do not lubricate studs or nut threads. Lubricants will not allow the fasteners to be tightened correctly, which causes excessive clamp load. Studs can break and cause wheels to loosen and separate from the vehicle. Serious personal injury can result.

9. Add two drops of oil between the body and flange on the stud nuts. Do not use more than two drops of oil. Figure 6.53.

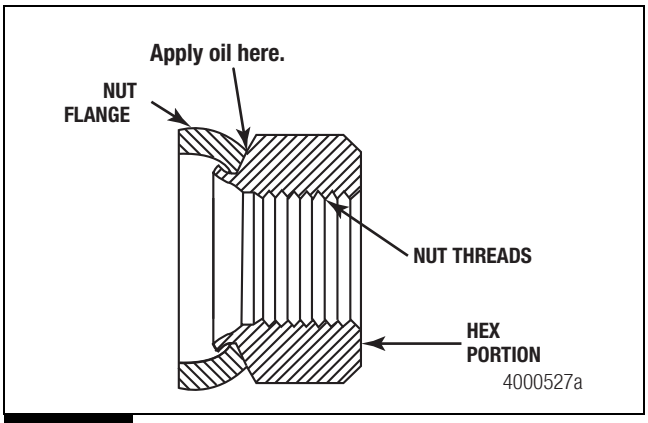

Figure 6.53

⚠ DANGER

Install nuts with the correct thread size on the studs. A nut with an incorrect thread size will not turn freely on the stud or will fit loosely on the stud. The thread can strip, which can cause loss of clamp load. The wheels can loosen and separate from the vehicle. Death or serious personal injury can result.

10. Position the nuts onto the studs. Use a 1/2-inch (12.7 mm) drive impact wrench to draw the stud into the hub. Do not exceed 300 lb-ft (408 N•m). Figure 6.54 and Figure 6.55.

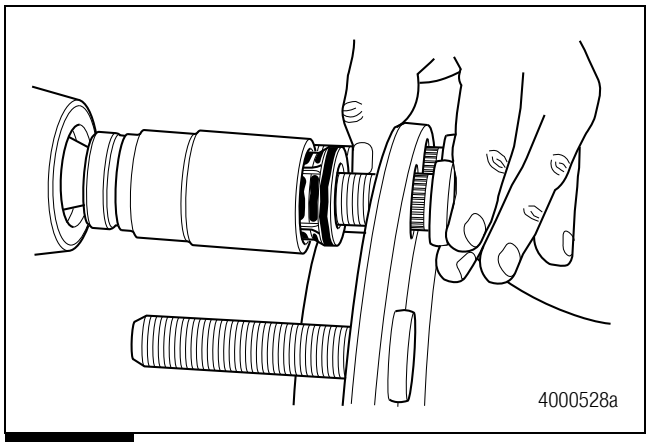

Figure 6.54

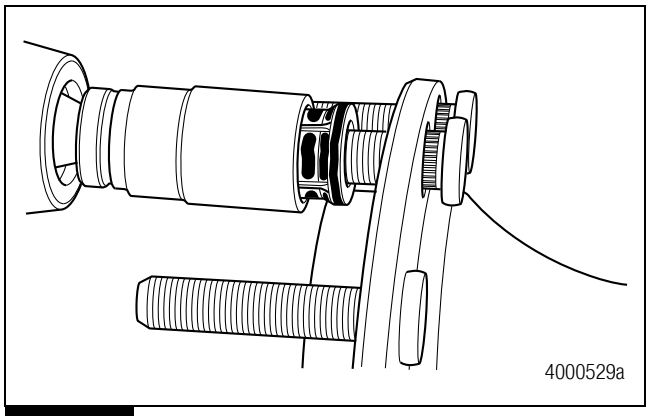

Figure 6.55

11. Use a 0.0015-inch (0.0381 mm) feeler gauge to check that the stud is correctly seated. Figure 6.56.
    - **If the stud is not correctly seated:** Remove the stud, clean all surfaces and install a new stud as described previously.
    - **If the stud is still not correctly seated:** Replace the hub. Refer to the hub manufacturer's information for replacement procedures.

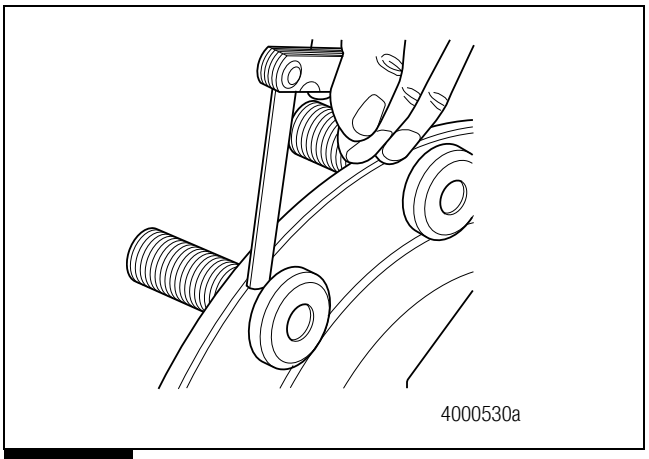

Figure 6.56

12. Remove all the nuts. Install the wheel and tire assembly.
13. Discard all removed studs.

Alternate Method — Replacing Studs with the Hub Removed from the Vehicle

1. Remove the unitized wheel end from the spindle. Refer to Section 4.
2. Support the inboard side of the flange adjacent to the stud head and perpendicular to the press cylinder.

⚠ DANGER

Observe all hazard alerts provided by the press manufacturer to avoid death or serious personal injury.

3. Use a press on the threaded end of the stud to force the stud out of the flange. Discard all removed studs.
4. Turn over the unitized wheel end. Support the outboard side of the flange close to the stud hole and perpendicular to the press cylinder.
5. Use a press on the stud head applying no more than 10,000 pounds (4540 kg) of force to seat the new stud.
6. Install the unitized wheel end. Refer to procedure in this section.

Unitized Wheel End

⚠ WARNING

Use only dye penetrant inspection techniques on unitized wheel-end hub units. Be careful not to get penetrant fluids in the bore of the hub unit. Do not use fluid immersion-based crack inspection techniques. The fluids can enter the joint between the inner bearing cones through the bore of the hub unit and damage the lubricant. Serious personal injury and damage to components can result.

1. Inspect and replace any parts that are worn, cracked or damaged. Check for cracks using dye penetrant, magnetic flux or fluorescent particle testing methods. Follow the manufacturer's procedures.
2. Clean the unitized wheel-end inner bore and spindle with a clean, dry rag. Do not apply solvent.
3. Check the bore of the unitized wheel end for any obstructions and check the spindle for any nicks or burrs.

NOTE: The spindle O-ring, Meritor part number 5X-1301 contained in Kit 1433, makes it easier for you to remove the unitized wheel-end hub from the spindle because it helps to prevent contaminants from entering the assembly. When you remove the unitized wheel-end hub, install a new O-ring.

4. Coat the new O-ring with a thin coat of Meritor part number 2297-C-8297 or Dow Corning Molykote D to assist in installing the O-ring.

⚠ DANGER

Do not apply anti-seize or anti-fretting compound to spindle threads. These compounds decrease a fastener assembly's capability to maintain clamp load, which can cause wheels to loosen and separate from the vehicle. Serious personal injury and damage to components can result.

5. Coat the inside of the unitized wheel end with anti-seize compound. Make certain to cover the inner and outer bearing races. Do not apply anti-seize or anti-fretting compound onto the spindle or threads. Wipe away any anti-seize or anti-fretting compound that may have dripped onto the spindle threads.
6. Slide a new O-ring, Meritor part number 5X-1301, onto the spindle. The O-ring must be positioned against the knuckle journal. Figure 6.57.

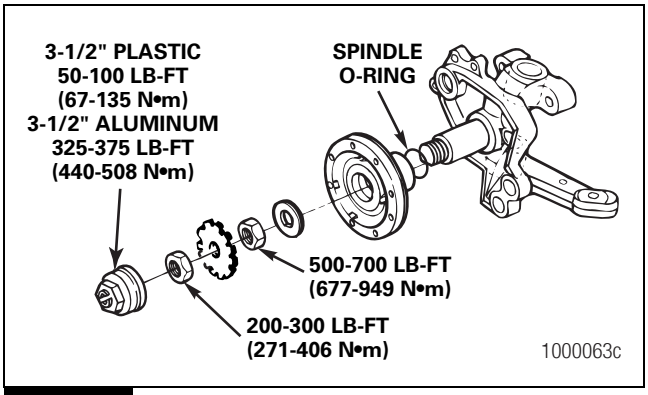

Figure 6.57

⚠ CAUTION

Align the unitized wheel end STRAIGHT onto the spindle. Do not allow the assembly to misalign and contact the spindle threads. Bearing damage can occur that requires replacement of the entire unitized wheel end.

7. Carefully align the unitized wheel-end bore with the spindle and slide the unitized wheel end STRAIGHT onto the spindle.
   - **If the unitized wheel end does not slide on easily:** Do not force it onto the spindle. The unitized wheel end can become jammed on the spindle if it is not aligned correctly with the spindle.
   - **If the unitized wheel end becomes jammed on the spindle:** Carefully remove the unitized wheel end from the spindle so that the inner bearings do not disassemble or loosen from the unitized wheel end.
8. Install the inner "D" washer and inner wheel bearing nut onto the spindle stud. Tighten the inner wheel bearing nut to 500-700 lb-ft (678-949 N•m) while rotating the unitized wheel end a minimum of five rotations. Figure 6.57.
9. Install the tabbed washer and outer wheel bearing nut onto the spindle. Tighten the outer wheel bearing nut to 200-300 lb-ft (271-406 N•m).

NOTE: The inner wheel bearing nut and the outer wheel bearing nut are identical, but the torque values are different.

10. Bend the parts of the tabbed washer that protrude over the flats of the outer wheel bearing nut and the inner wheel bearing nut. Bend the washer a minimum of one flat edge to each nut.

Hubcaps

NOTE: Threaded plastic and metal hubcaps are interchangeable. Snap-ring and threaded hubcaps are not interchangeable.

Threaded Plastic Hubcaps

NOTE: It is not necessary to remove residual Loctite® sealant from the original hubcap installation.

1. Wipe the inner truck hub unit threads with a clean shop cloth. Do not use compressed air, solvents or power washers to clean the hub unit threads.
   - **To remove grease or mud from the exposed inner threads:** Use a wire brush to remove grease or mud from the inner hub unit threads. Wipe the inner threads with a clean shop cloth.

⚠ WARNING

Only use Loctite® brand RTV adhesive sealant number 5699 (Meritor part number 2297-Z-7098) when servicing a unitized wheel-end assembly. Do not use any other brand of RTV sealant. Use of other brands of RTV sealant can cause corrosion, damage and incompatibility between unitized wheel-end components. Serious personal injury and damage to components can result.

2. Apply a continuous 1/8-3/16-inch (3-5 mm) bead of RTV sealant to the outside first thread around the entire circumference of the hubcap. You must use Meritor part number 2297-Z-7098 RTV sealant, Loctite® adhesive sealant number 5699. Figure 6.58.

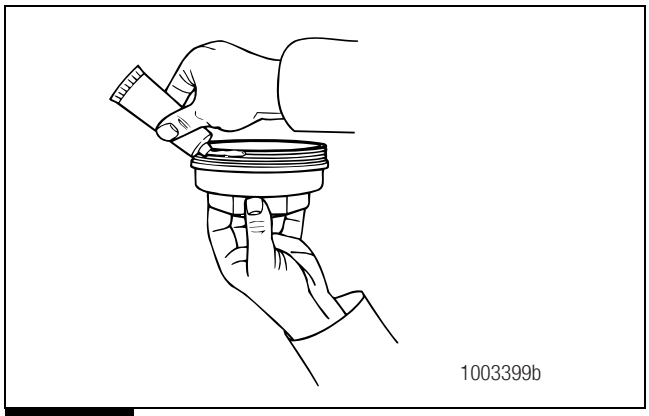

Figure 6.58

3. Install the plastic hubcap into the unitized wheel end by hand.
4. Use a torque wrench with the correct size socket to tighten plastic hubcaps to 50-100 lb-ft (67-135 N•m). Disregard the torque value embossed on the hubcap. Refer to Table I.

Table I: Threaded Hubcaps

Threaded plastic hubcap	RTV sealant (Meritor part number 2297-Z-7098 RTV sealant, Loctite® adhesive sealant number 5699)	50-100 lb-ft (67-135 N•m)
Metal (aluminum) hubcap		325-376 lb-ft (440-508 N•m)

Metal (Aluminum) Hubcaps

1. Clean the INNER unitized wheel-end threads and threaded hubcap external threads with a wire brush. Apply Meritor part number 2297-Z-7098 RTV sealant, Loctite® adhesive sealant number 5699, to the hubcap threads.
2. Turn the hubcap by hand until it's seated.
3. Use a torque wrench with the correct size socket to tighten the hubcap to 325-375 lb-ft (440-508 N•m). Refer to Table I.

Reusing the Threaded Hubcaps

If you observe any of the following conditions while tightening a used hubcap, replace the hubcap with a new one.

- The hubcap "jumps" threads and makes a popping sound while you're tightening it.
- The hubcap begins to yield because threads are stripped.
- You cannot achieve the correct torque specification of 50-100 lb-ft (67-135 N•m) for plastic hubcaps or 325-375 lb-ft (440-508 N•m) for metal hubcaps.

Snap-Ring Hubcaps — Hub Puller and Screwdriver Method

There are two methods for installing a hubcap with a snap ring. You can either use a hub puller and flat-blade screwdriver, or a punch and mallet.

1. Install the hubcap into the hub unit by hand. Figure 6.59.

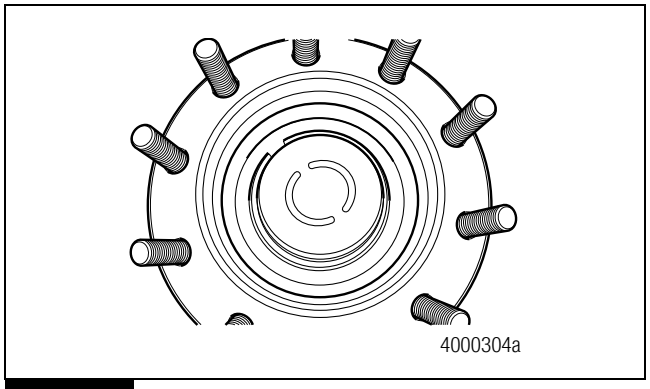

Figure 6.59

2. Insert the square end of the snap ring into the recess of the hubcap. Press the snap ring into position. This will seat the snap ring flat against the hubcap flange.
3. Use a wrench and the hub puller to install the hubcap into the hub unit. Figure 6.60.

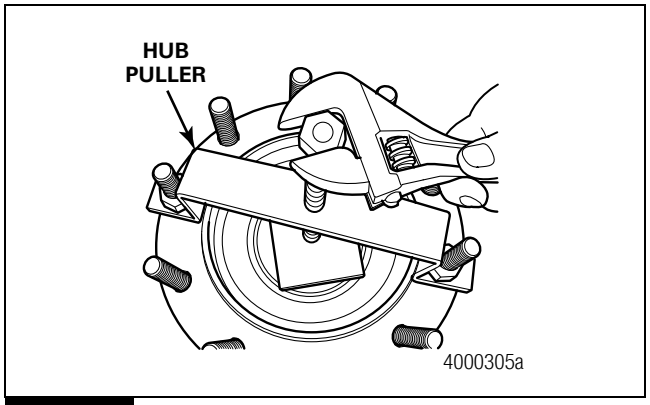

Figure 6.60

4. Position a hub puller over the hubcap. Use a steel spacer between the hubcap and the hub puller threaded stud to avoid scratching the hubcap surface.
5. Use a screwdriver to install the snap ring into the hub unit groove. Press the end of the snap ring and continue around the entire length of the snap ring. Figure 6.61.

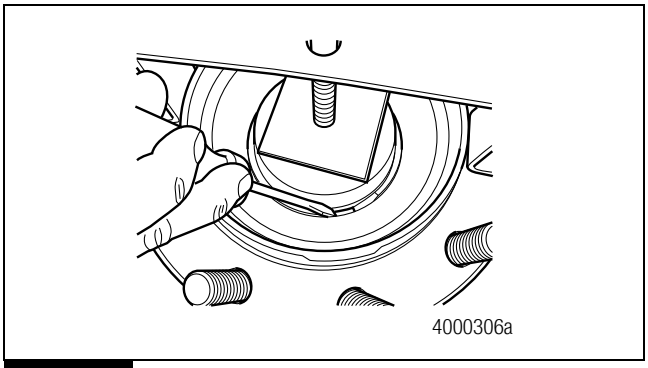

Figure 6.61

6. Verify that the snap ring is correctly seated in the groove.

Snap-Ring Hubcaps — Punch and Mallet Method

1. If a hub puller is not available, install the hubcap into the hub unit by hand. Figure 6.59.
2. Insert the square end of the snap ring into the recess of the hubcap. Press the snap ring into position. This will seat the snap ring flat against the hubcap flange.

NOTE: Don't use a steel hammer to install and seat the snap ring. You'll damage the hubcap. Use a dead-blow mallet.

3. Use a punch to apply pressure to the opening end of the snap ring. Strike the hubcap several times with a dead-blow mallet at the same time.
4. Move the punch CLOCKWISE around the snap ring to install it into the hub unit groove.
5. Strike the hubcap several times with a dead-blow mallet to fully seat the snap ring.

Drag Link

Refer to the vehicle manufacturer's instructions for installation procedures. Figure 6.62.

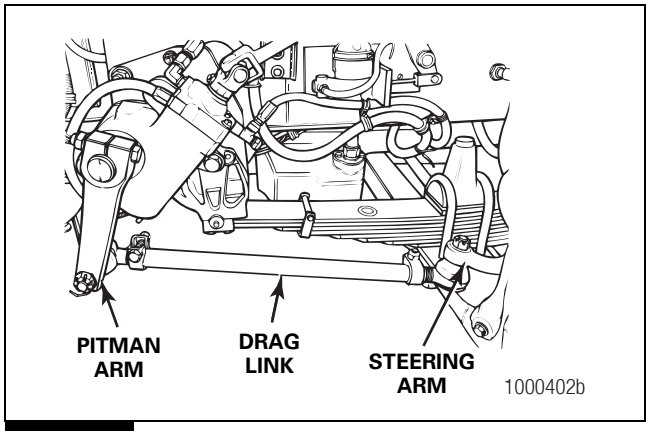

Figure 6.62

Brake Components and Wheel Ends

Axles with Conventional Wheel Ends

1. Install the brake assembly onto the knuckle. Refer to the vehicle manufacturer's procedures. Lubricate the wheel bearings. Refer to Section 9.
2. Install the outer wheel bearing cone into the hub. Install the adjusting nut.
3. Adjust the wheel bearings. Refer to Section 7. Refer to the wheel-end hardware manufacturer's procedures if necessary.
4. Install the cap and the gasket onto the hub. Install the capscrews and tighten to 20-30 lb-ft (27-41 N•m).
5. Install the wheel and tire assembly. Lower the vehicle to the ground. Check for correct operation.
6. Check and adjust the toe. Refer to Section 7.

Hazard Alert Messages

Read and observe all hazard alert messages in this publication.

⚠ WARNING
To prevent eye injury, always wear eye protection when performing vehicle maintenance or service.

Inspection

Inspection Before Alignment

Parts

Refer to Section 3 in this manual.

Wheels and Tires

1. Verify that the tires are inflated to the specified pressure.
2. Verify that the front tires are the same size and type.
3. Verify that the lug nuts are tightened to the specified torque.
4. Verify that the wheels are balanced.
5. Check for bent or damaged wheels.

Front Suspension

1. Verify that all fasteners are tightened to the specified torque.
2. Inspect the leaf springs for wear and damage.
3. Inspect the shock absorbers for wear and damage.

Rear Axle and Rear Suspension

Front tire wear can be caused by the rear axle. If the outer edge of one front tire is worn and the inner edge of the other front tire is worn, check the following.

1. All fasteners are tightened to the specified torque.
2. The leaf springs are not worn or damaged.
3. The bushings in the leaf springs are not worn or damaged.
4. The torque rods, if used, are correctly adjusted.
5. The frame is not bent.
6. The rear axle, especially a tandem axle, is correctly aligned. Refer to the vehicle or the suspension manufacturer's procedure.
7. Refer to any additional rear axle and suspension recommendations and specifications from the vehicle manufacturer.

Alignment

Front Wheel Alignment

Check the front wheel alignment:

1. Every 200,000 miles (320 000 km) or 24 months (normal maintenance).
2. When the vehicle does not steer correctly.
3. To correct a tire wear condition.

Minor Front Wheel Alignment

Perform a minor front wheel alignment for all normal maintenance conditions using the following procedure.

1. Inspect all systems that affect the wheel alignment. Refer to procedure in this section.
2. Check and adjust the wheel bearings or wheel bearing end play for the unitized wheel end.
3. Check and adjust the toe.

Major Front Wheel Alignment

Perform a major front wheel alignment to correct steering and tire wear conditions using the following procedure.

1. Inspect all systems that affect the wheel alignment. Refer to procedure in this section.
2. Check and adjust the wheel bearings. For models with unitized wheel ends, check wheel bearing end play for the unitized wheel end. Refer to Section 3.
3. Check and adjust the maximum turn angle.
   - **If the vehicle has power steering:** Check and adjust the pressure relief in the power steering system. Refer to procedure in this section.
4. Check and adjust the turning radius angle. Refer to procedure in this section.
5. Check the king pin, or steering axis, inclination. Refer to procedure in this section.
6. Check the camber angle. Refer to procedure in this section.

⚠ DANGER

Replace damaged or out-of-specification axle components. NEVER bend, repair or recondition axle components by welding or heat-treating. A bent axle beam reduces axle strength, affects vehicle operation and voids Meritor's warranty. Death or serious personal injury can result.

7. Check and adjust the caster angle. Refer to procedure in this section.
8. Check and adjust the toe. Refer to procedure in this section.

Check and Adjust

Wheel Bearings

The most accurate bearing end play measurement is obtained with the brake drum and tires removed.

- **If the brake drum and tires are installed and the bearing end play is greater than 0.003-inch (0.0762 mm):** Remove the brake drum and the tire-wheel assembly. Recheck bearing end play.

⚠ DANGER

Park the vehicle on a level surface. Block the wheels to prevent the vehicle from moving. Support the vehicle with safety stands. NEVER work under a vehicle supported only by jacks. Jacks can slip and fall over. Failure to use safety stands can result in death or serious personal injury and damage to components.

1. Park the vehicle on a level surface. Block the wheels to prevent the vehicle from moving. Set the parking brake.
2. Raise the vehicle so that the wheels are off the floor. Support the vehicle with safety stands.
3. Remove the capscrews and remove the gasket and the cap from the hub.
4. Verify that the brake drum and the hub fasteners are tightened to the manufacturer's specifications.
5. Attach a dial indicator with the magnetic base at the bottom of the hub or the brake drum. Adjust the dial indicator so that the pointer is against the center of the knuckle. Set the dial indicator on ZERO. Figure 7.1.

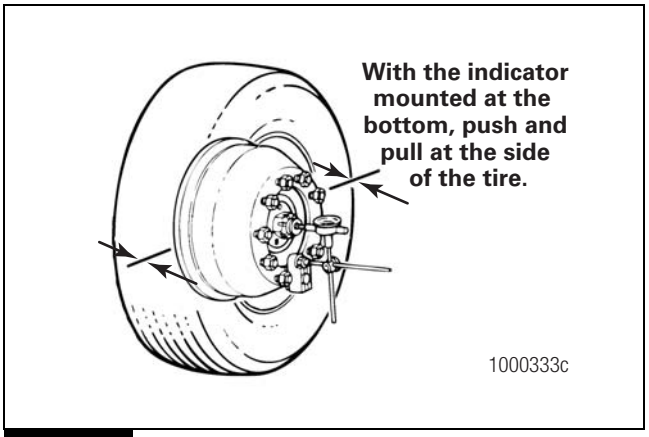

Figure 7.1

NOTE: Do not push or pull at the top and bottom of the hub or drum, which can affect the end play measurement.

6. Measure the end play by pushing and pulling on each side of the hub or drum while looking at the dial indicator. The end play is the total travel observed.
   - **If the end play is 0.001-0.005-inch (0.025-0.127 mm):** The bearings do not need adjustment.
   - **If the end play is not 0.001-0.005-inch (0.025-0.127 mm):** Adjust the wheel bearings. Figure 7.1.
7. **On double nut and lock fasteners:** Bend the lock washer off the wheel bearing nut. Remove the wheel bearing nut, the lock washer and the pierced lock ring. Figure 7.2.

   On single nut fasteners: Remove the cotter pin from the adjusting nut. Figure 7.3.

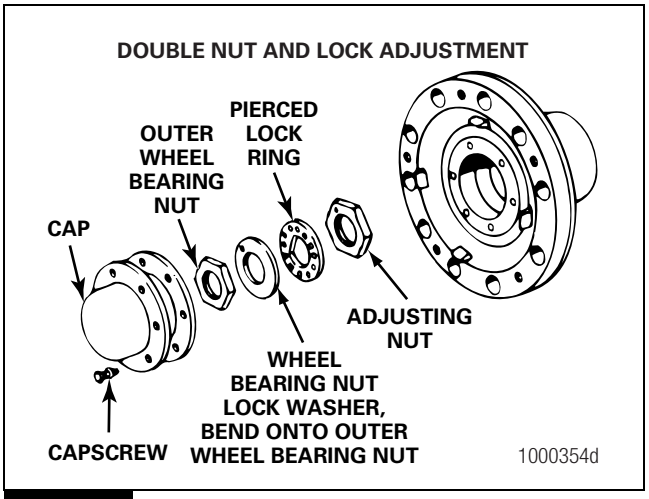

Figure 7.2

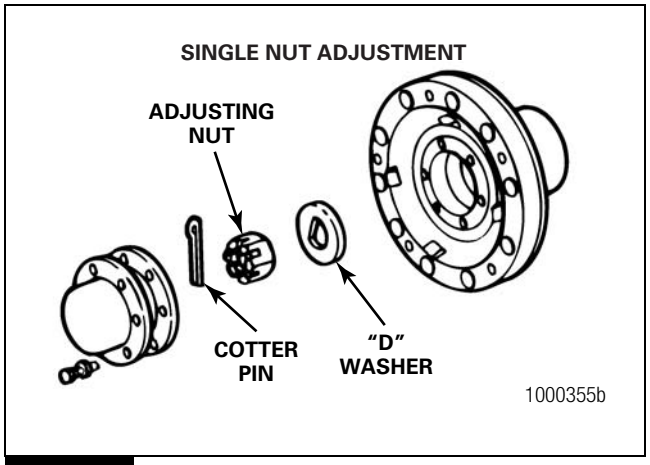

Figure 7.3

8. For disc brake wheel ends, back off the brake caliper until the rotor is clear from the pad linings about 1/16-inch (1.588 mm) gap or more. Refer to Maintenance Manual MM-0467, EX+™ Air Disc Brake, for more information about EX225 disc brake inspection and adjustment. To obtain this publication, refer to the Service Notes page on the front inside cover of this manual. Figure 7.4.

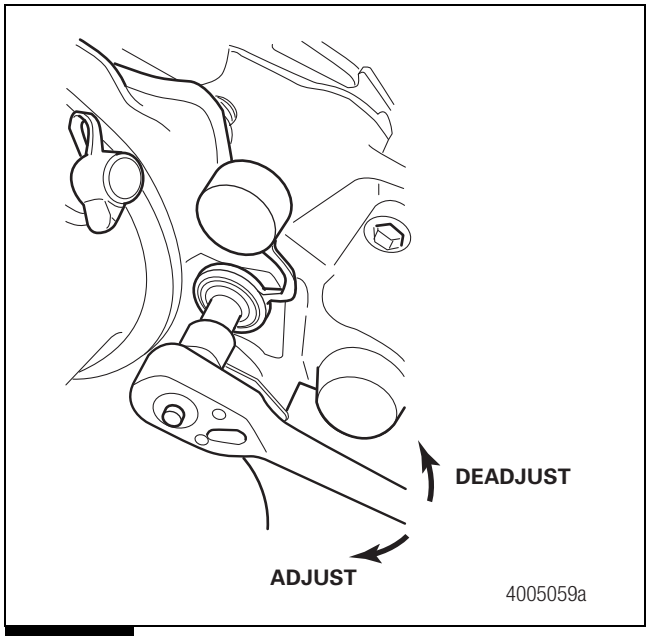

Figure 7.4

⚠ DANGER

Use a torque wrench to tighten or loosen adjusting nuts. Do not use a hammer to directly hit adjusting nuts, or to hit a chisel or drift placed against them. Damaged adjusting nuts can prevent you from obtaining correct wheel bearing end play, which can affect vehicle operation and cause the wheels to separate from the vehicle. Death or serious personal injury and damage to components will result.

9. Use a torque wrench to tighten the adjusting nut to 150 lb-ft (203 N•m) while rotating the tire a minimum of five revolutions. Figure 7.5.

10. Back off the nut one complete turn. Tighten the nut to 50 lb-ft (68 N•m). Figure 7.5.

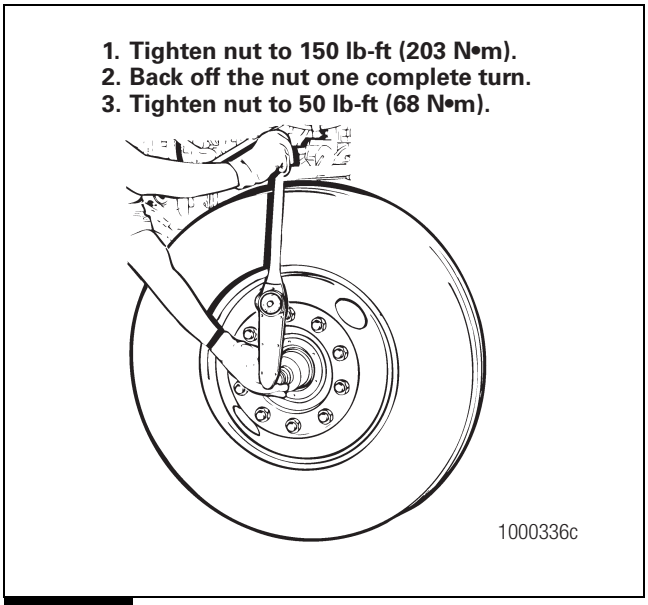

Figure 7.5

11. For axles with single nut fasteners, perform the following procedure.

    A. Back off the adjusting nut 1/8 turn. Figure 7.6.

    B. Rotate the nut in either direction to line up a slot with the closest cotter pin hole in the spindle.

    C. Install a new cotter pin into the nut.

    D. Measure the end play. The end play must be 0.001-0.005-inch (0.025-0.127 mm). Refer to Steps 4-5. Readjust if necessary.

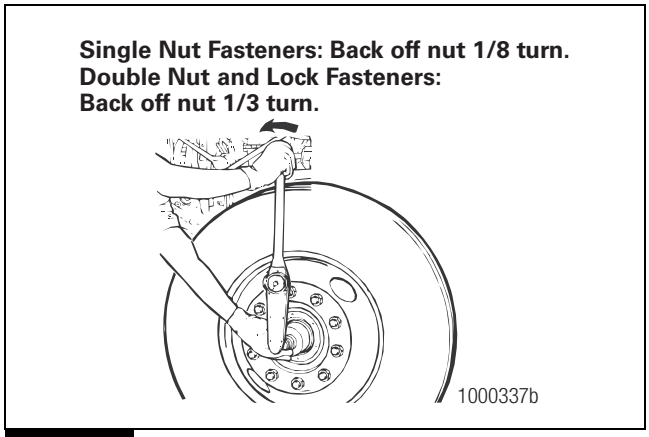

Figure 7.6

12. For axles with double nut and lock fasteners, perform the following procedure.
    A. Back off the adjusting nut. Figure 7.6.
    - **For spindle thread diameters of 1-1/8-inches (28.6 mm) and 1-1/2-inches (38.1 mm):** Back off the nut 1/3 turn.
    - **For spindle thread diameters of 1-3/4-inches (44.45 mm) and more:** Back off the nut 1/4 turn.

    B. Install the pierced lock ring, the lock washer and the wheel bearing nut.

    C. Tighten the wheel bearing nut.
    - **For spindle thread diameters of 1-1/8-inch (28.6 mm) used on MFS-06, MFS-07 and MFS-08 Series axles:** Tighten the nut to 150-225 lb-ft (203-305 N•m).
    - **For spindle thread diameters of 1-1/8-inches (28.6 mm) up to 2-5/8-inches (66.67 mm):** Tighten the nut to 200-300 lb-ft (271-407 N•m).
    - **For spindle thread diameters of 2-5/8-inches (66.7 mm) or more:** Tighten the nut to 250-400 lb-ft (339-542 N•m).

    D. Measure the end play. The end play must be 0.001-0.005-inch (0.025-0.127 mm). Refer to Steps 4-5. Readjust if necessary.
    - **If the end play is to specification:** Bend the washer to at least one flat edge of the outer wheel bearing nut. Figure 7.2.
13. Install the gasket and the cap onto the hub. Install the capscrews and tighten to 20-30 lb-ft (27-41 N•m).
14. Lower the vehicle to the ground. Check for correct vehicle operation.

Adjustment

Maximum Turn Angle

⚠ CAUTION

Do not exceed the maximum turn angle specified by the vehicle manufacturer. If the angle is exceeded, the steering arms, the cross tube and the tie rod ends will be damaged.

⚠ CAUTION

In power steering systems, the hydraulic pressure must relieve or "drop off" at the end of the steering stroke with 1/8-inch (3 mm) minimum clearance at the stop bolt. If the pressure does not relieve correctly, the components of the front axle will be damaged. Follow all instructions as directed to ensure the pressure is relieved correctly.

⚠ CAUTION

The power steering rating must be properly sized for the GAWR rating of the axle. Using a power steering system that is overrated for the application can cause damage to axle components.

NOTE: If the steering system is out-of-adjustment, inspect the steering arm for damage. Use a magnetic particle or liquid dye penetrant inspection procedure to inspect the steering arm. Pay particular attention to the bend, the taper, and the area near the ball stud. Refer to the vehicle manufacturer's manual for additional inspection procedures.

Stop Bolt Adjustment

1. Determine the vehicle manufacturer's maximum turn angle specification.
2. Adjust the steering stop bolts to achieve the maximum turn angle specification as follows.

For Two-Piece 3/4-Inch Stop Bolt including Unitized

A. Loosen the stop bolt jam nut. Figure 7.7.

B. Adjust the stop bolt to the maximum turn angle specification. At the maximum turn angle for a LH and RH turn, the stop bolt for the inner turn wheel should contact the boss on the axle beam.

C. Hold the stop bolt so it does not rotate and tighten the jam nut on conventional knuckles to 65-85 lb-ft (88-115 N•m).

D. Repeat this procedure on the opposite side.

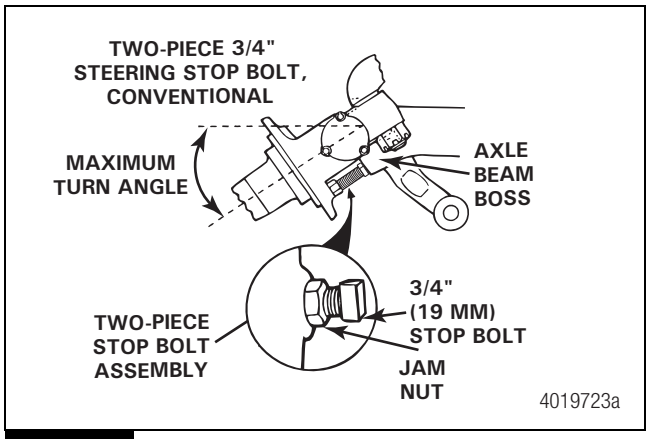

Figure 7.7

For Four-Piece 1/2-Inch Stop Bolt, Conventional Only

A. Place the washer onto the adapter. Figure 7.8.

B. Apply adhesive patch material into the 3/4-inch (19 mm) knuckle bore stop bolt adapter hole.

C. Install the adapter with the washer into the threaded knuckle cavity.

D. Tighten the adapter to 85-115 lb-ft (115-155 N•m).

E. Hold the adapter so it does not rotate and loosen the stop bolt jam nut.

F. Adjust the stop bolt to the maximum turn angle specification. At the maximum turn angle for a LH and RH turn, the stop bolt for the inner turn wheel should contact the boss on the axle beam.

G. Hold the stop bolt so it does not rotate and tighten the stop bolt jam nut to 50-75 lb-ft (68-101 N•m).

H. Repeat this procedure on the opposite side.

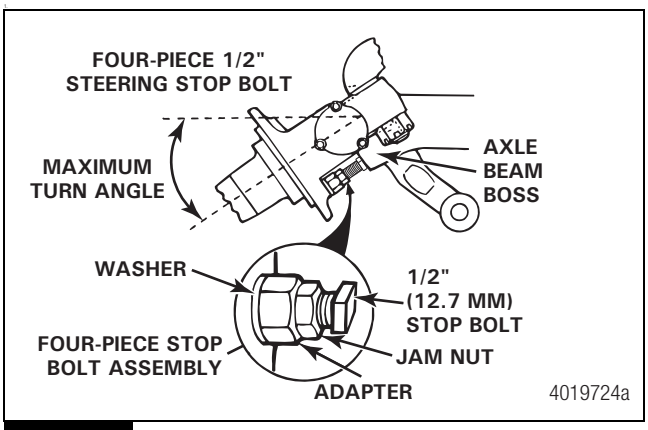

Figure 7.8

Power Steering Systems with Automatic Poppet Valves

Follow the manufacturer's recommendations to adjust the power steering system poppets. Once properly set, they are designed to relieve hydraulic pressure or "drop off pressure" with 1/8-inch (3 mm) minimum clearance between the stop bolt and the beam pad. This adjustment should be done at both a left-hand and right-hand full turn.

IMPORTANT NOTE: Special care must be taken if the maximum turn angle is being reduced from a previously setup condition in order to "reset" the steering gear. Follow all manufacturer requirements to reset the steering gear as required.

Power Steering Systems without Automatic Poppet Valves

Follow the manufacturer's directions to adjust the steering stop points. If the steering system uses a mechanical stop (as opposed to the internal pressure relief stop in the gear), the maximum travel for both a LH and RH turn must be set at 1/8-inch (3 mm) before the stop bolt contacts the axle beam boss.

Turning Radius Angle

When turning, the inner wheel must turn at a greater angle than the outer wheel. This angle is the turning radius angle, often called the Ackerman angle. Figure 7.9.

Check the turning radius angle with the radius plates on the alignment equipment. To determine correct turning radius angle specification, refer to the vehicle manufacturer's manual.

- **If the angle is not within specifications:** Premature tire wear will occur. Inspect the knuckle, tie rod arms, tie rod ends and cross tube for wear or damage. Service as necessary.

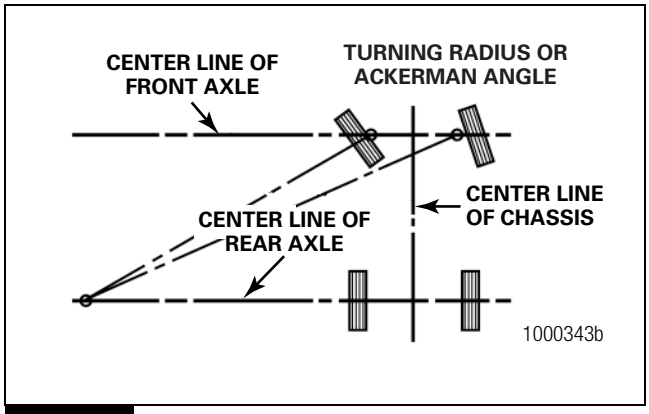

Figure 7.9

King Pin Inclination

NOTE: Refer to the vehicle manufacturer's king pin inclination specifications.

King pin, or steering axis inclination, is the angle measured between the center line of the king pin and the vertical position, as viewed from the front of the vehicle. Figure 7.10.

The king pin inclination and the camber angle are designed into the axle to place the tire tread center line in contact with the road. This reduces steering effort and improves directional stability.

Use an alignment machine to check the king pin inclination angle. Refer to the vehicle manufacturer's inclination angle specifications.

The king pin inclination is not adjustable. If the inclination is not at the specified angle, check the axle beam and knuckle for damage. Service as necessary.

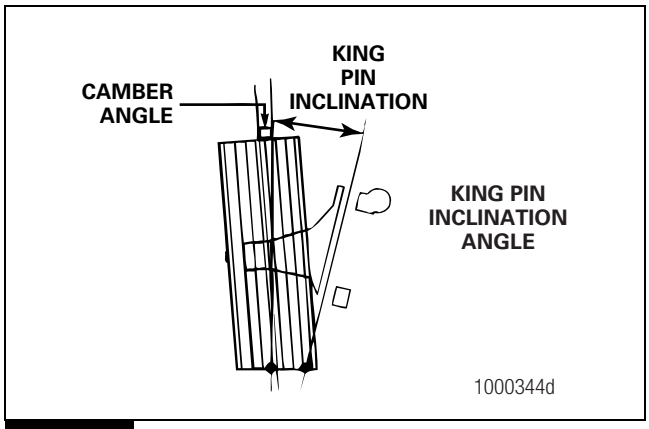

Figure 7.10

Recommended Camber, Caster and Toe Specifications

Meritor provides specific, recommended specifications for camber, caster and toe in this publication, Maintenance Manual 2, Front Non-Drive Steer Axles: All Meritor Conventional, Easy Steer Plus and MFS Series.

Refer to the Service Notes page on the front inside cover of this manual for information on Recommended Practices published by The Technology Maintenance Council (TMC) of the American Trucking Associations, Inc.

Camber Angle

⚠ DANGER

Replace damaged or out-of-specification axle components. NEVER bend, repair or recondition axle components by welding or heat-treating. A bent axle beam reduces axle strength, affects vehicle operation and voids Meritor's warranty. Death or serious personal injury can result.

Camber is the angle of the tire with respect to the ground. Camber is positive when the distance between the top of the wheels is greater than the distance at the ground. Figure 7.11.

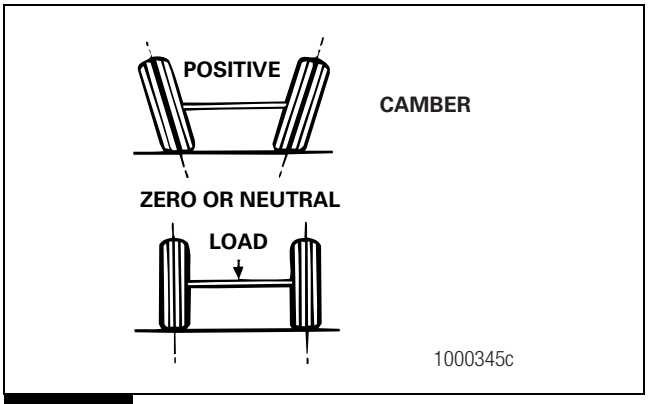

Figure 7.11

A small amount of positive camber is built into the knuckle, because camber changes with load. This results in a zero camber angle when the vehicle is operated at normal load.

If camber is out of specification by more than 1-1/2 degrees, rapid or uneven tire wear will occur. Bias ply tires will show excess camber easily, while with vehicles equipped with radial tires, excess camber will not be as evident.

The camber angle is not adjustable. The camber angle is machined into both the axle beam and the knuckle. If the camber angle is not at the specified angle, check the axle beam and the steering knuckle for damage. Service as necessary.

Use an alignment machine to check the camber angle. Refer to the alignment equipment manufacturer's procedure and vehicle manufacturer's manual to determine specifications for the correct camber setting. Table J and Table K provide Meritor's camber specifications for biased and unbiased axles.

Table J: Recommended Camber Angle for Axles with Unbiased Camber

Side	Axle Assembly	Unloaded Vehicle 50%-75% GAWR*	Loaded Vehicle 90%-100% GAWR*
Left	1/4° (± 7/16°)	0° (± 7/16°)	–1/4° (± 7/16°)
Right	1/4° (± 7/16°)	0° (± 7/16°)	–1/4° (± 7/16°)

*GAWR=Gross Axle Weight Rating

Table K: Recommended Camber Angle for Axles with Biased Camber

Side	Axle Assembly	Unloaded Vehicle 50%-75% GAWR*	Loaded Vehicle 90%-100% GAWR*
Left	3/4° (± 7/16°)	1/2° (± 7/16°)	1/4° (± 7/16°)
Right	1/4° (± 7/16°)	0° (± 7/16°)	–1/4° (± 7/16°)

*GAWR=Gross Axle Weight Rating

Caster Angle

Caster is the FORWARD or REARWARD tilt of the king pin center line when viewed from the side of the vehicle. The caster angle is the angle from the vertical position to the center line of the king pin. If the top of the king pin axis is toward the rear of the vehicle, the caster is positive. A slight positive caster creates a self-aligning action that helps to stabilize the vehicle after turning and stabilizes it for driving straight ahead. Figure 7.12.

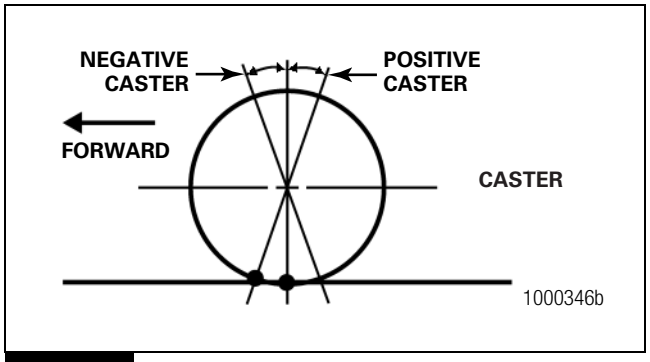

Figure 7.12

Always use an alignment machine to check the caster angle. When checking caster, refer to the alignment equipment manufacturer's procedures.

If the caster is greater than specification, it can result in increased steering efforts or a shimmy condition.

The caster angle is controlled by tapered shims installed under the leaf springs. Adjust the caster according to the specifications and procedures of the vehicle manufacturer.

Caster specifications are set by the vehicle manufacturer. Refer to the vehicle manufacturer's specifications for the caster setting.

Measure and Adjust the Toe

Toe is the relationship of the distance between the front of the front tires and the rear of the front tires.

When the front distance is less than the rear distance, the wheels are "toed in." Toe-in is designed into the vehicle to counteract the tendency of the tires to toe-out when the vehicle is driven.

Incorrect toe will result in rapid tire wear.

⚠ DANGER

Park the vehicle on a level surface. Block the wheels to prevent the vehicle from moving. Support the vehicle with safety stands. NEVER work under a vehicle supported only by jacks. Jacks can slip and fall over. Failure to use safety stands can result in death or serious personal injury and damage to components.

1. Park the vehicle on a level surface. Block the wheels to prevent the vehicle from moving. Set the parking brake.
2. Use jacks to raise vehicle so that front tires are off the ground. Support the front axle with safety stands.
3. Use paint or chalk to mark the center area of both front tires around the complete outer surface of the tire.
4. Place the pointers of a trammel bar on the marks of each tire. Rotate the tires. Verify that a straight line is marked on the outer surface of the tire.
5. Lower the vehicle to the floor. Do not measure toe with the front axle in the raised position. The weight of the vehicle must be on the front axle when toe is measured. Move the vehicle FORWARD and BACKWARD 10 feet (3 meters).
6. Place the trammel bar at the back of the tires. Raise the pointers so that the pointers are level with the spindles. Align the pointers with the marks on the tires. Measure and record the distance between the pointers.
7. Repeat Step 6 for the front of the tires. Figure 7.13.

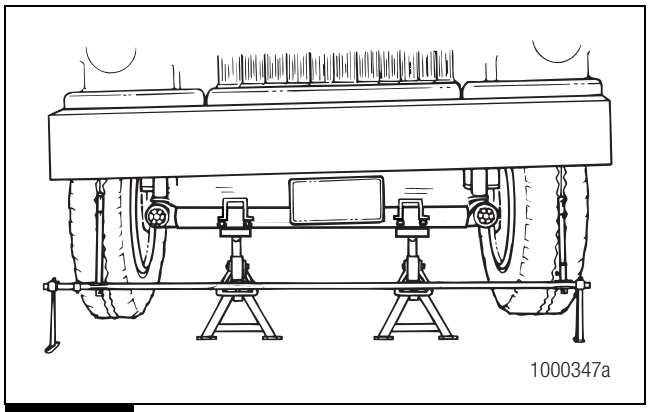

Figure 7.13

8. To obtain the toe measurement, subtract the distance reading between the front of the tires from the distance reading between the back of the tires. Figure 7.14.

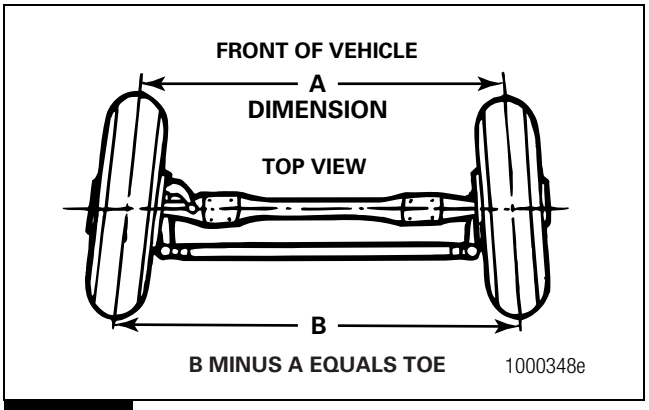

Figure 7.14

9. Use the following procedure if the toe measurement is not within the correct specifications shown in Table L.

Table L: Toe Specifications

Unloaded Vehicles	1/16-inch (1.587 mm) ± 1/32-inch (0.794 mm)
Loaded Vehicles	1/32-inch (0.794 mm) ± 1/32-inch (0.794 mm)

   A. Loosen the tube clamp nut and bolt on each end of the cross tube.
   B. Turn the cross tube until the specified toe distance is obtained.
   C. The threaded portion of the tie rod end must be installed into the cross tube beyond the point where the tube slot stops.
   D. Tighten the nut and bolt on each end of the cross tube to the specified torque. Refer to Section 10.

10. Repeat Steps 1-8 to check the toe dimension.

Hazard Alert Messages

Read and observe all hazard alert messages in this publication.

⚠ WARNING

To prevent eye injury, always wear eye protection when performing vehicle maintenance or service.

Troubleshooting

Front Non-Drive Steer Axle Diagnostic Table

Table M:

Condition	Cause	Correction
Tires wear out quickly or have uneven tire tread wear.	Tires have incorrect air pressure.	Place specified air pressure in tires.
	Tires out-of-balance.	Balance or replace tires.
	Incorrect tandem axle alignment.	Align tandem axles.
	Incorrect toe-in setting.	Adjust toe-in specified setting.
	Incorrect steering arm geometry.	Service steering system as necessary.
	Excessive wheel end play exists.	Readjust wheel bearings.
Vehicle is hard to steer.	Power steering system pressure low.	Repair power steering system.
	Steering gear linkage not assembled correctly.	Assemble steering gear correctly.
	Steering linkage needs lubrication.	Lubricate steering linkage.
	King pins binding.	Replace king pins.
	Incorrect steering arm geometry.	Service steering system as necessary.
	Caster out-of-adjustment.	Adjust caster as necessary.
	Tie rod ends hard to move.	Replace tie rod ends.
	Worn thrust bearing.	Replace thrust bearing.
Tie rod ends are worn and require replacement.	Tie rod ends require lubrication.	Lubricate ends of cross tube. Make sure lubrication schedule is followed.
	Severe operating conditions.	Increase frequency of inspection and lubrication intervals.
	Damaged boot on tie rod end.	Replace boot.

Condition	Cause	Correction
Bent or broken cross tube, tie rod end ball stud, steering arm or tie rod end. Component requires replacement.	Too much pressure in the power steering system, pressure exceeds vehicle manufacturer's specification.	Adjust power steering system to specified pressure.
	Power steering system cut-off pressure, out of adjustment.	Adjust power steering system to specified pressure.
	Vehicle operated under severe conditions.	Verify that vehicle is operated correctly.
	Add-on type of power steering system not installed correctly.	Correctly install add-on power steering system.
	Steering gear overtravel poppets incorrectly set or malfunctioning.	Check for correct operation or adjust overtravel of poppets to vehicle manufacturer's specifications.
	Axle stops incorrectly set.	Set axle stops to vehicle manufacturer's specification.
Worn or broken steering ball stud.	Drag link fasteners tightened higher than vehicle manufacturer specified.	Tighten drag link fasteners to vehicle manufacturer's specified torque.
	Lack of lubrication or incorrect lubricant.	Lubricate linkage with specified lubricant.
	Power steering stops out-of-adjustment.	Adjust stops to specified dimension.
Worn king pins and king pin bushings.	Worn or missing seals and gaskets.	Replace seals and gaskets.
	Incorrect lubricant.	Lubricate axle with specified lubricant.
	Axle not lubricated at scheduled frequency.	Lubricate axle at scheduled frequency.
	Incorrect lubrication procedures.	Use correct lubrication procedures.
	Lubrication schedule does not match operating conditions.	Change lubrication schedule to match operating conditions.
Vibration or shimmy of front axle during operation.	Caster out-of-adjustment.	Adjust caster.
	Wheels and/or tires out-of-balance.	Balance or replace wheels and/or tires.
	Worn shock absorbers.	Replace shock absorbers.

Hazard Alert Messages

Read and observe all hazard alert messages in this publication.

⚠ WARNING

To prevent eye injury, always wear eye protection when performing vehicle maintenance or service.

Maintenance

NOTE: Refer to Section 3 for inspection procedures.

Refer to Table N for lubrication and inspection intervals based on the vehicle's usage.

Table N: Lubrication and Inspection Intervals

Severity of Service	Typical Vocations	Typical Operation Conditions	Inspection Interval[1]	Lubrication Interval[2]	
Light	On-highway or turnpike, linehaul only	High mileage operation, more than 50,000 miles/ year (80 500 km/year) 95% on-highway/turnpike surface	Each oil change or maximum 50,000 miles (80 500 km)	King Pin Bushing/ Tie Rod End[3]	Every 100,000 miles (161 000 km)
Medium	Fire and rescue, city delivery, inner city coach, heavy haul, school bus, motor home, transit coach	Lower mileage operation, less than 50,000 miles/year (80 500 km/year)	20,000 miles (32 000 km)	King Pin Bushing/ Tie Rod End[3]	Every 40,000 miles (64 000 km)
Harsh	Logging, oil field, construction, heavy haul, yard tractor (highway licensed), residential refuse	Low mileage operation, less than 25,000 miles/year (40 250 km/year) Heavy-duty service with substantial off-road operation	10,000 miles (16 100 km)	King Pin Bushing/ Tie Rod End	Every 10,000 miles (16 100 km)
Severe	Mining, yard tractor (non-highway licensed), and land fill refuse	Heavy-duty service	5,000 miles (8050 km) or 100 hours	King Pin Bushing/ Tie Rod End	Every 5,000 miles (8050 km) or 100 hours
Very Severe	Mining, logging and construction	Severe duty 80-100% off highway	48 hours	King Pin Bushing/ Tie Rod End	Every 48 hours

[1] Draw key nuts should be retightened at 6,000 miles (9656 km) and then again every 36,000 miles (57 936 km) thereafter.

[2] If power washers are used during vehicle cleaning operations, lubrication intervals need to be adjusted. Frequent power-washed vehicles will require more frequent lubrication.

[3] Tie rod ends with an anti-tilt style seal require lubrication every 10,000 miles (16 100 km).

Lubrication

Lubricant Specifications

Table O: Front Non-Drive Axle Greasing Specifications

Grease*	Meritor Specification	NLGI Grade	Grease Classification	Outside Temperature
Multi-Purpose Grease*	O-617-A	1	Lithium 12-Hydroxyl Stearate	Refer to the grease manufacturer's specifications for the temperature service limits.
	O-617-B	2		

*Meritor recognizes that industry trends are moving toward increased selection and usage of synthetic grease in vehicle maintenance. However, some seals are known to expand when in contact with synthetic grease. Consult your local Meritor representative for synthetic grease application references BEFORE using any synthetic grease when performing axle service and maintenance.

Hazard Alert Messages

Read and observe all hazard alerts below and those that precede instructions or procedures you will perform.

⚠ DANGER

Park the vehicle on a level surface. Block the wheels to prevent the vehicle from moving. Support the vehicle with safety stands. NEVER work under a vehicle supported only by jacks. Jacks can slip and fall over. Failure to use safety stands can result in death or serious personal injury and damage to components.

Lubrication

Tie Rod End

This procedure refers to all tie rod ends on Meritor non-drive steer axles.

1. Park the vehicle on a level surface. Block the wheels to prevent the vehicle from moving. Set the parking brake.
2. Turn the vehicle wheels to the STRAIGHT position. Figure 9.1.

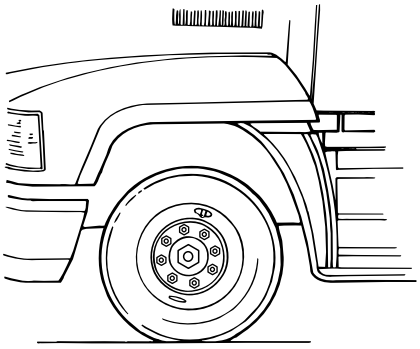

Figure 9.1

3. Wipe the grease fitting, seal and boot clean with shop towels. Figure 9.2.

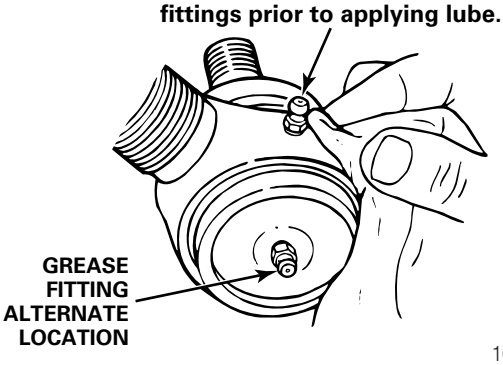

Figure 9.2

4. Attach either a hand or air pressure grease gun to the grease fitting. Figure 9.3. If using air pressure, do not exceed 150 psi (1035 kPa).

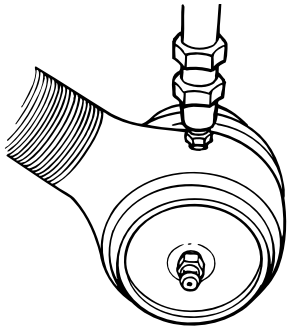

Apply grease into all grease fittings where required.

1003423b

Figure 9.3

5. Apply grease into the grease fitting. Discolored old grease should come out of the purge holes near the boot crimp or bellows area, typically three or more places. Figure 9.4.
6. If the tie rod end is designed for lube service and it does not accept grease:
   A. Remove the grease fitting.
   B. Inspect the threaded grease fitting hole in the tie rod end and remove any obstructions.
   C. Install a new grease fitting.
   D. Continue the lubrication procedure.
7. Apply grease until all old grease is purged from the boot.

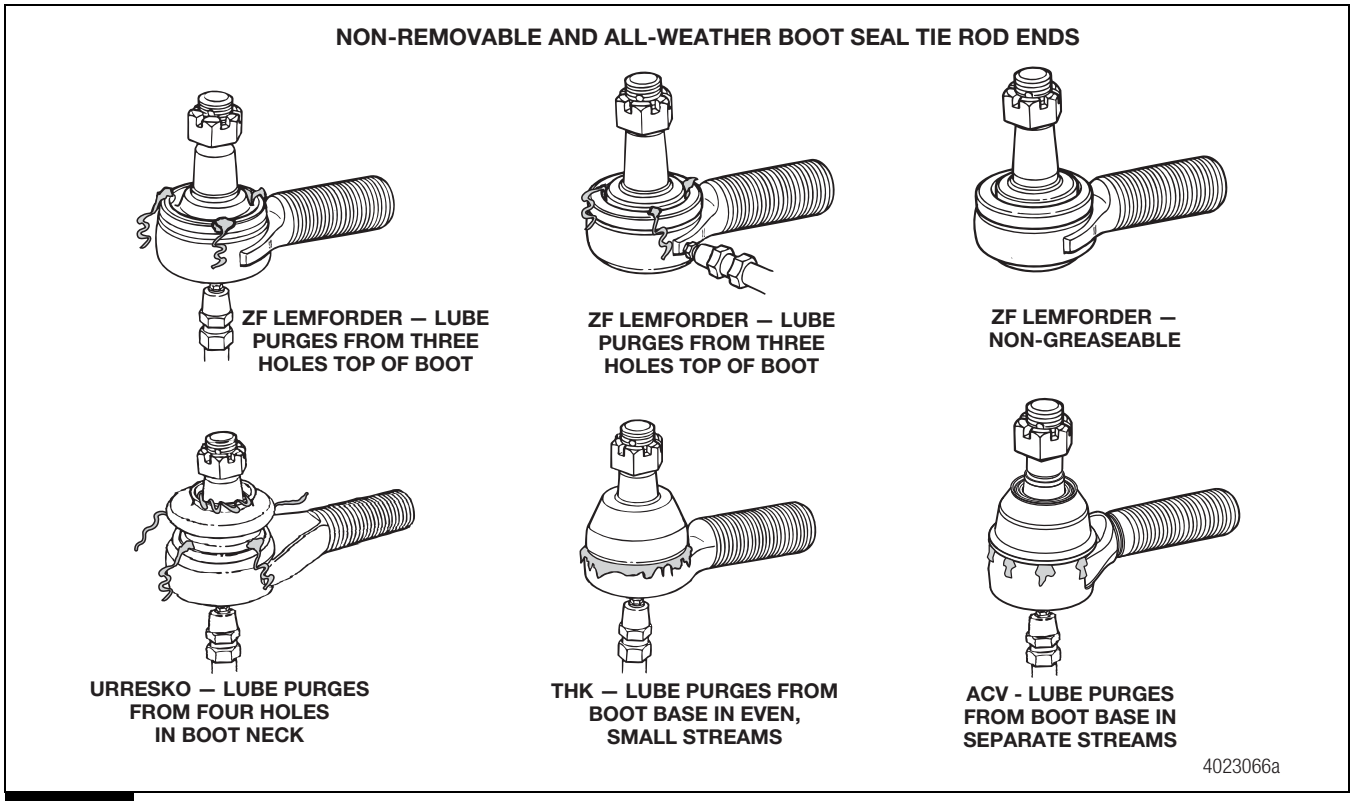

Figure 9.4

King Pins

Axles with Conventional Wheel Ends

1. Park the vehicle on a level surface. Block the wheels to prevent the vehicle from moving. Set the parking brake.
2. Verify that the tires touch the ground. Do not raise the vehicle. The full weight of the vehicle must be on the axle assembly. Figure 9.5.

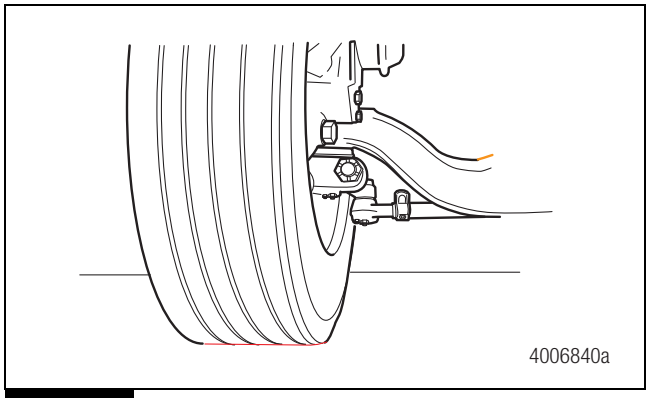

Figure 9.5

3. Clean all grease fittings before you lubricate the king pins.
4. Lubricate the king pins through the top and bottom grease fittings. Figure 9.6.

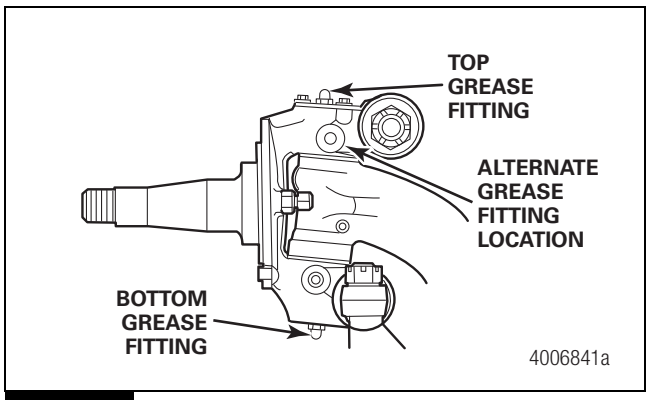

Figure 9.6

5. Apply lubricant into the top grease fitting until new grease purges from the upper shim pack. Figure 9.7.

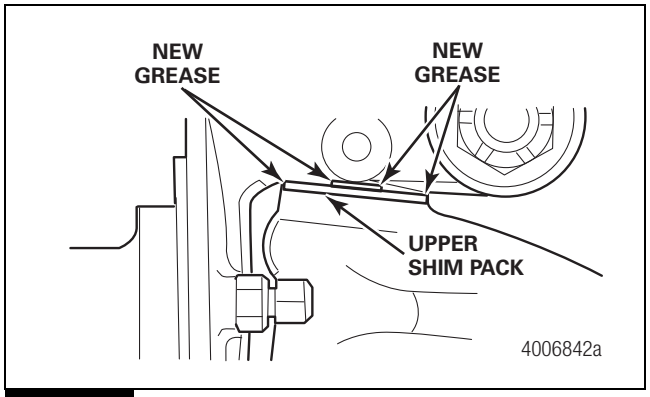

Figure 9.7

6. Apply lubricant into the bottom grease fitting until new grease appears from under the lower lip of the bearing deflector. Figure 9.8.

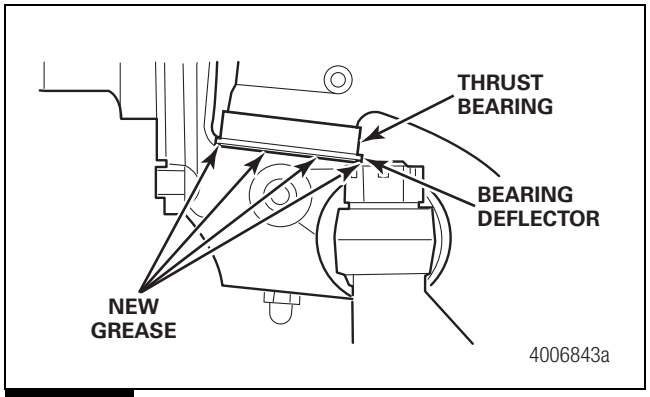

Figure 9.8

Axles with Unitized Wheel Ends

1. Park the vehicle on a level surface. Block the wheels to keep the vehicle from moving. Set the parking brake.
2. Verify that the tires touch the ground. DO NOT RAISE THE VEHICLE.
3. Clean off all grease fittings prior to lubrication.
4. Lubricate the king pins through the grease fittings on the top and bottom king pin caps. Figure 9.6.
5. Force lubricant into the upper and lower king pin grease fitting caps until new lubricant flows from between the upper axle beam end and the knuckle, and the lower axle beam end and the knuckle. Figure 9.9.

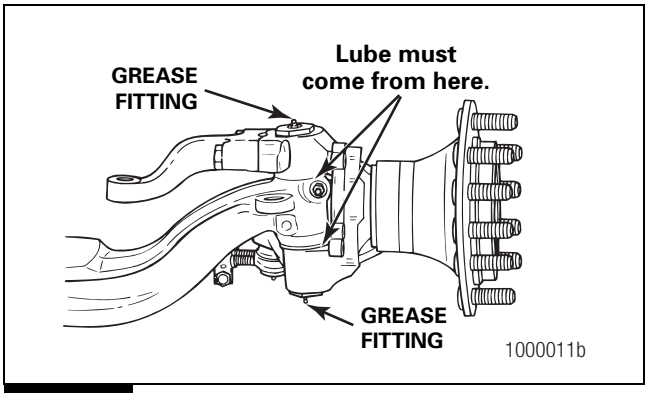

Figure 9.9

Ball Studs on the Steering Arm and the Tie Rod Arm Ends

Axles with Conventional and Unitized Wheel Ends

1. Park the vehicle on a level surface. Block the wheels to prevent the vehicle from moving. Set the parking brake.
2. Verify that the tires touch the ground. DO NOT RAISE THE VEHICLE.
3. Clean off all grease fittings prior to lubrication.
4. Apply lubricant until new lubricant comes from the boot. Figure 9.10 and Figure 9.11.

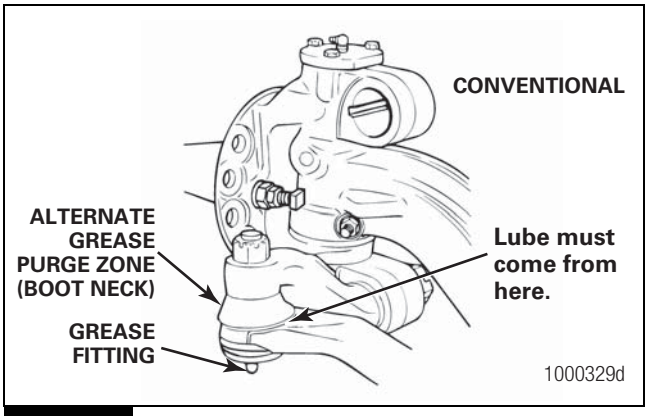

Figure 9.10

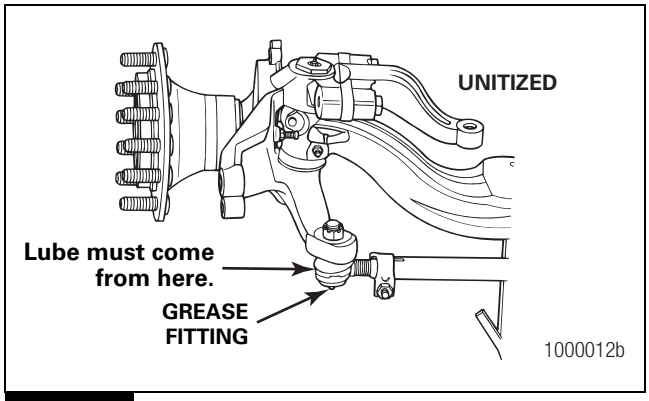

Figure 9.11

Grease-Lubricated Wheel Bearings

Axles with Conventional Wheel Ends

NOTE: This procedure applies to hubs with grease-lubricated wheel bearings.

1. Park the vehicle on a level surface. Block the wheels to keep the vehicle from moving. Set the parking brake.
2. Remove the tire and wheel assembly. Remove and disassemble the hub. Refer to Section 4.
3. Remove the old lubricant from all parts. Discard the seals. Inspect the wheel bearings for wear or damage. Replace worn or damaged bearings. Refer to Section 5.
4. Force the specified lubricant from the large end of the cones into the cavities between the rollers and cage. Pack the hub between the bearing cups with lubricant to the level of the smallest diameter of the cups. Figure 9.12.

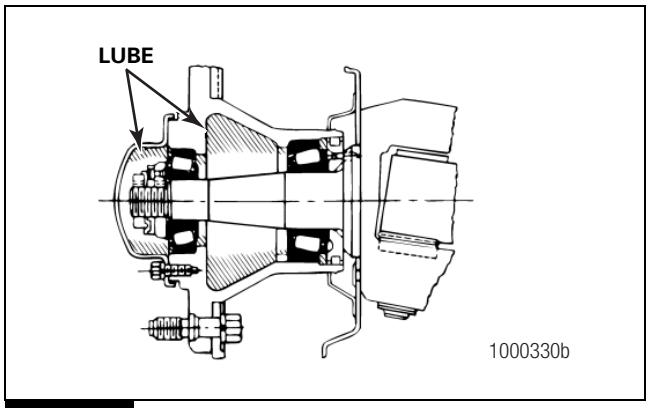

Figure 9.12

5. Install the inner and outer bearing cones into the cups in the hubs. The bearing cups must be pressed tight against the shoulder in the hubs.
6. Install new wheel seals into the hubs.
7. Install the hub and the wheel and tire assembly. Install the outer wheel bearing cone into the hub. Install the adjusting nut.
8. Adjust the wheel bearings. Refer to Section 7.

Oil-Lubricated Wheel Bearings

Axles with Conventional Wheel Ends

NOTE: This procedure applies to hubs with oil-lubricated wheel bearings.

1. Check the level on the cap. If the oil level is not at the specified level on the cap, remove the fill plug.
2. Add the specified oil until the oil is at the specified level. Figure 9.13.

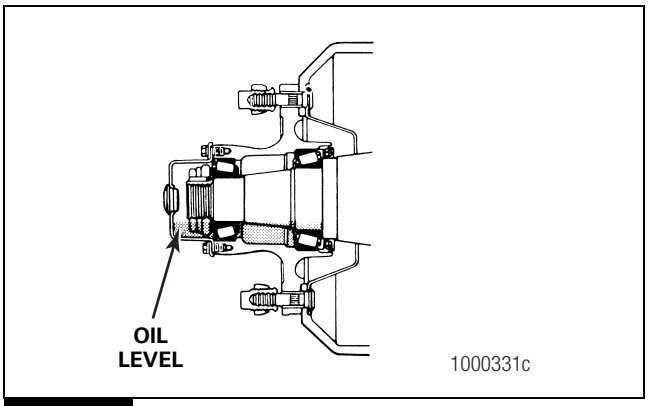

Figure 9.13

Maintenance

Tighten Draw Key Nuts

Axles with Conventional and Unitized Wheel Ends

NOTE: This procedure applies to all except 901, 903 and 970 Series axles. These axles do not use a draw key. Refer to the identification tag on the front of the axle beam.

Tighten the nuts on the side of the knuckle that hold the draw keys to 30-45 lb-ft (41-61 N•m) at the following times. Figure 9.14 and Figure 9.15.

- After the first 6,000 miles (10 000 km) of new vehicle operation
- Every 36,000 miles (58 000 km) of operation

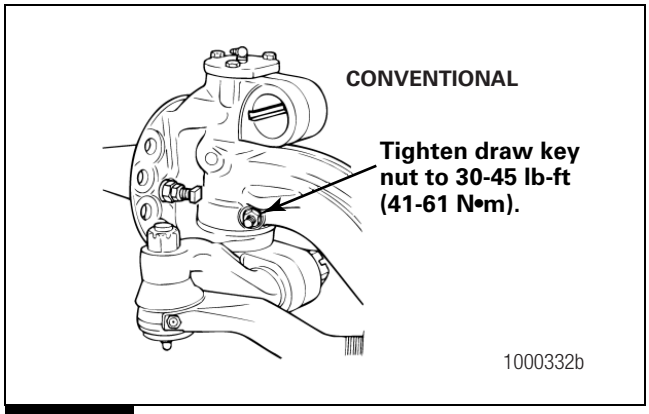

Figure 9.14

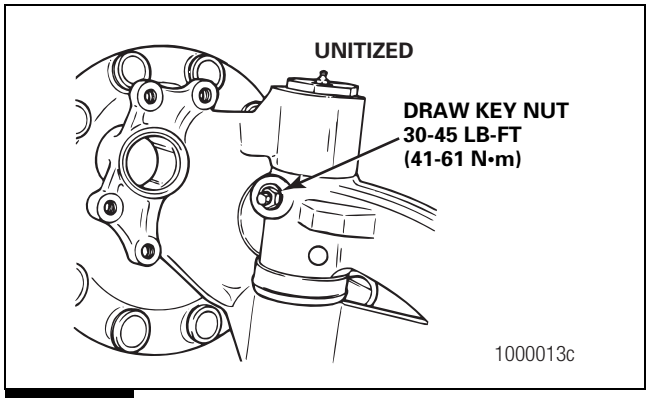

Figure 9.15

Check the Steering Arm Bolts

⚠ WARNING

Take care when using Loctite® adhesive to avoid serious personal injury. Read the manufacturer's instructions before using this product. Follow the instructions carefully to prevent irritation to the eyes and skin. If Loctite® adhesive material gets into the eyes, follow the manufacturer's emergency procedures and get checked by a physician as soon as possible.

1. Check the steering arm bolts for minimum torque. Refer to Table P.

Table P: Steering Arm Bolts Torque Specifications

Axle	Torque lb-ft (N•m)
MFS-6	215-265 (290-360)
MFS-7 or MFS-8	360-470 (490-638)
All other axles	300-450 (406-610)

- **If steering arm bolt torque has fallen below minimum torque:**

A. Remove the bolts. Clean all the threads. Install new Loctite® 680 adhesive, Meritor part number 2297-K-5523.

B. Tighten the bolts to specification. Refer to Table P.

2. Check the steering arm bolt torque every 200,000 miles (320 000 km) or 24 months.
3. Refer to Section 5 for Dri-Loc® fastener installation procedures.

Torque Specifications

Front Non-Drive Axles with Conventional Wheel Ends

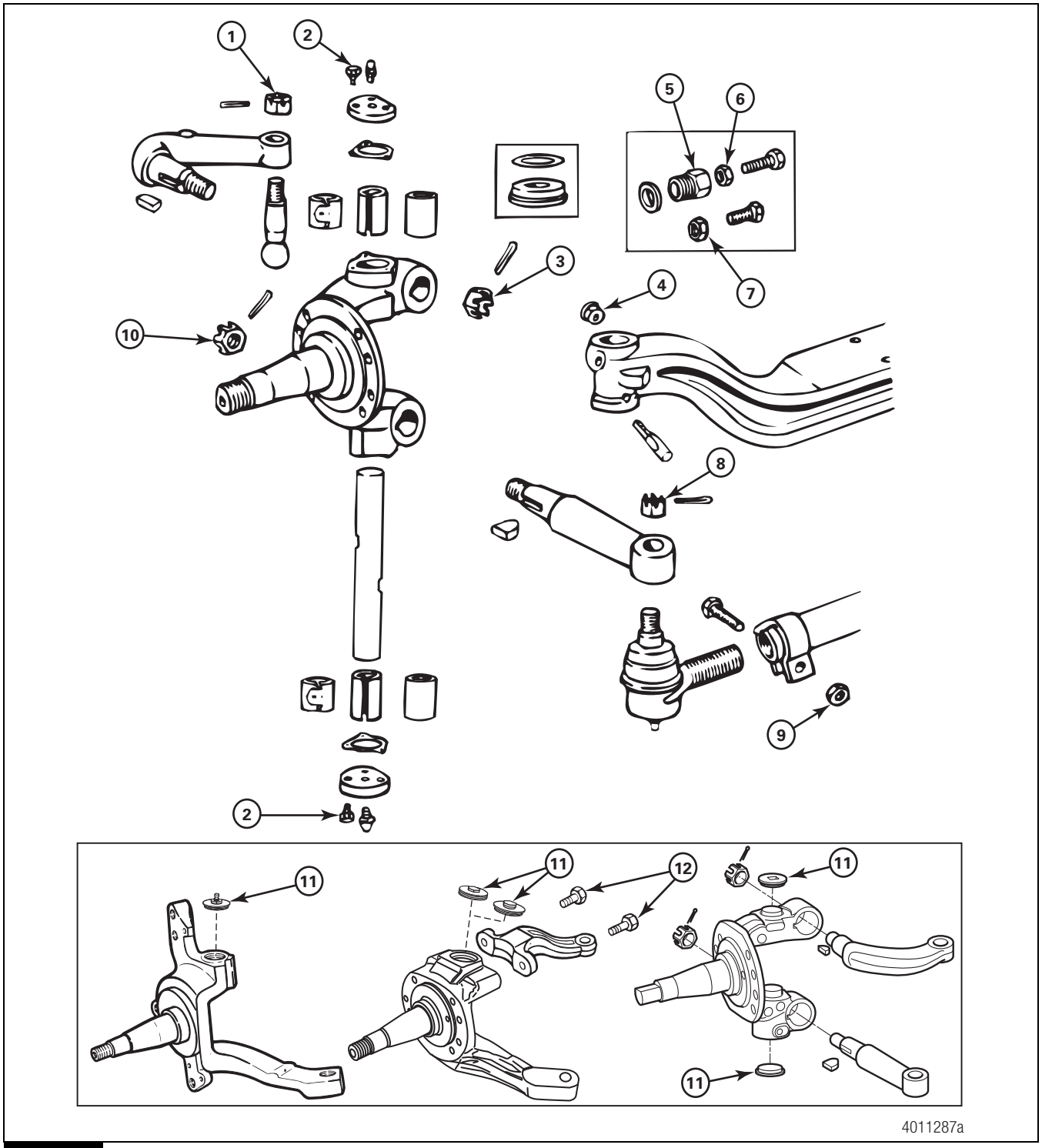

Figure 10.1

Table Q: Front Axle with Conventional Wheel-End Torque Specifications

Item	Description	Size	Torque Range lb-ft	Torque Range N•m
1	Steering Arm-to-Drag Link Nut	Refer to the vehicle manufacturer's specifications.		
2	Knuckle Cap Capscrew	5/16"-18	20-30	28-40
3	Steering Arm-to-Knuckle Nut	7/8"-14	250-450	339-610
		1"-14	390-725	529-982
		1-1/8"-12	550-1025	746-1389
		1-1/4"-12	775-1450	1051-1965
		1-1/2"-12	1350-2525	1831-3423
4	Draw Key Nut	7/16"-20	30-45	41-61
5	3/4" Stop Screw Adapter		65-115	88-155
6	1/2" Stop Screw Lock/Jam Nut		50-75	68-101
7	3/4" Stop Screw Lock/Jam Nut		65-85	88-115
8	Tie Rod Arm-to-Tie Rod End Nut	7/8"-14	160-300	217-406
		1"-14	250-450	339-610
		1-1/8"-12	350-650	475-881
		1-1/4"-12	500-675	678-915
9	Cross Tube Clamp Nut	5/8"-11	60-80	81-110
		3/4"-10	155-175	211-237
10	Tie Rod Arm-to-Knuckle Nut	7/8"-14	250-450	339-610
		1"-14	390-725	529-982
		1-1/8"-12	550-1025	746-1389
		1-1/4"-12	775-1450	1051-1965
		1-1/2"-12	1350-2525	1831-3423
11	Threaded Knuckle Cap	2.00"-20	70-90	95-122
		1-5/8"-20		
12	Steering Arm Knuckle Bolt	3/4"-16	360-470	490-638
		M16 x 2.0	215-265	290-360

MFS Axles with Bolt-On, Integrated Steering and Tie Rod Arm Assemblies, and Conventional Wheel Ends

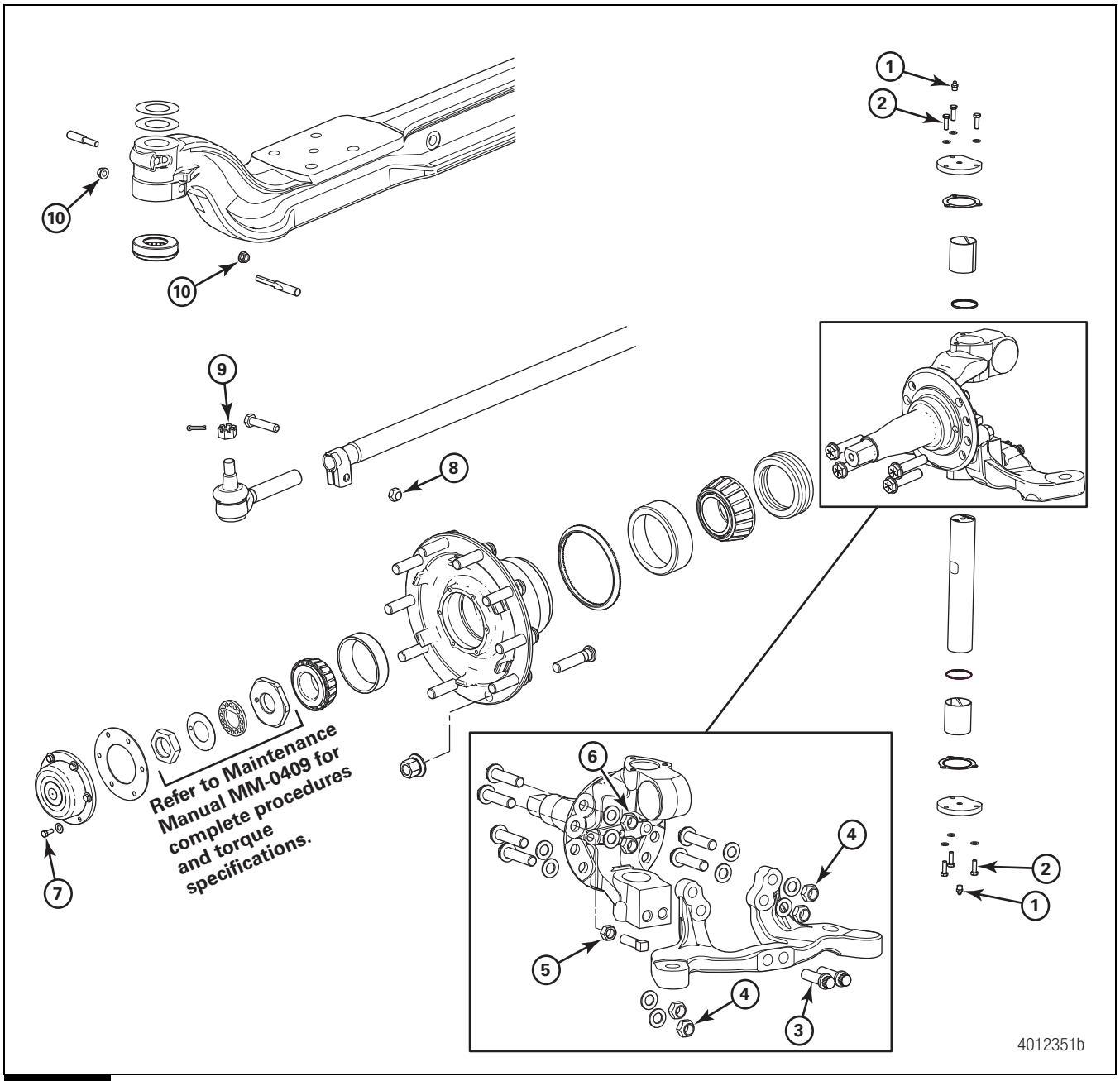

Figure 10.2

Table R: MFS Axles with Bolt-On, Integrated Steering and Tie Rod Arm Assemblies Torque Specifications

			Torque Range	
Item	**Description**	**Size**	**lb-ft**	**N•m**
1	Zerk Grease Fitting	1/8"-27 NPTF	3-5	4-6
2	King Pin Cap Capscrew	5/16"-18	12-16	16-22
3	12-Point Ferry-Head Bolt	3/4"-10	310-400	420-542
4	Knuckle-to-Steering and Tie Rod Arm Assembly Lock Nut	3/4"-16	370-410	502-556
5	Stop Bolt Jam Nut	5/8"-18	65-85	88-115
6	Brake Spider-to-Knuckle Lock Nut	3/4"-16	360-470	490-638
7	Hubcap Capscrew	5/16"-18	12-16	16-22
8	Tie Rod Tube Clamp Nut	5/8"-11 UNC	60-80	81-110
9	Tie Rod End Castle Nut	7/8"-14 UNF	160-300	217-406
10	Draw Key Nut	7/16"-20 UNF	30-45	41-61

Front Non-Drive Axles with Unitized Wheel Ends

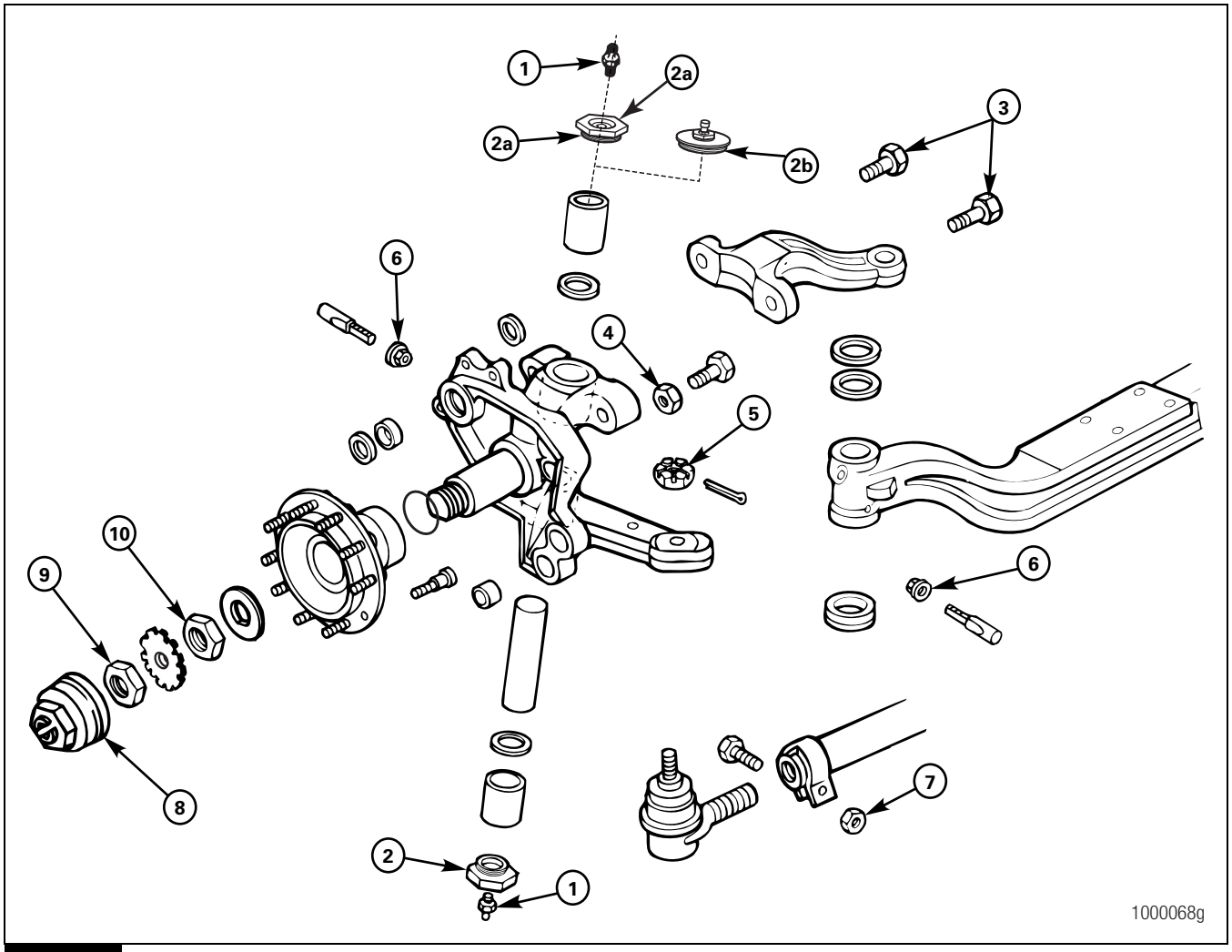

Figure 10.3

Table S: Front Axle with Unitized Wheel End Torque Specifications

			Torque Range	
Item	**Description**	**Size**	**lb-ft**	**N•m**
1	Grease Fitting	1/8"-27 P.T.F.	10 minimum	13.558 minimum
2a	Old Hexagon Threaded King Pin Cap	2-1/4"-20	60-80	81-108
2b	New Round Threaded King Pin Cap	2-1/4"-20	70-90	95-120
3	Steering Arm Knuckle Bolt	7/8"-14	300-450	406-610
4	Stop Screw Nut	1/2"-13	50-75	68-101

Item	Description	Size	Torque Range lb-ft	Torque Range N•m
5	Tie Rod Arm-to-Tie Rod End Nut	7/8"-14	160-300	217-406
		1"-14	250-450	339-610
		1-1/8"-12	350-650	475-881
		1-1/4"-12	500-675	678-915
6	Draw Key Nut	7/16"-20	30-45	41-61
7	Cross Tube Clamp Nut	5/8"-11	60-80	81-110
		3/4"-10	155-175	211-237
8	Hubcap	3-1/2" Plastic	50-100	67-135
		3-1/2" Aluminum	325-375	440-508
9	Outer Wheel Bearing Nut	—	200-300	271-406
10	Inner Wheel Bearing Nut	—	500-700	677-949

NOTE: All torque values apply to parts lightly coated with rust preventive grease. For dry parts, increase torque values by 10%. For parts heavily coated with grease, decrease torque values by 10%.

Special Tools

To obtain these tools, refer to the Service Notes page on the front inside cover of this manual.

Table T: Special Tools

Description Axle Models	Bosch Tool Number	King Pin Size (inches) 1.7935 MFS10, -12, -13, -14	1.9985 MFS16, -18, -20	1.4995 MFS7, -8	1.234 MFS6
King Pin Remover	4240				
King Pin Bushing Service Kit	[1]				
Basic Service Kit	PT 4375-A	X	X	X	X
FF- and FG-Series Kits	PT 4370-10	X			
FL-Series Kit	PT 4370-20		X		
MFS-6	PT-4370-110				X
FC and MFS-7 and -8	PT-4370-120			X	

[1] Use the Basic Service Kit along with the correct axle series kit.

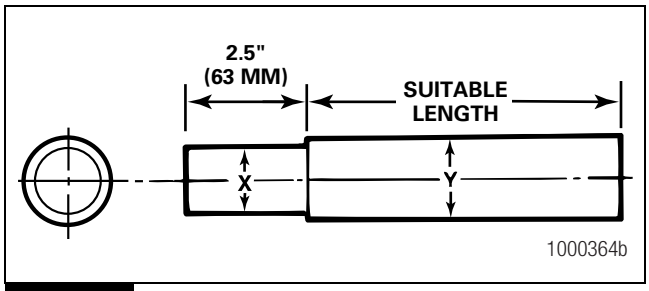

Figure 11.1

Table U: Dimensions for Bushing Removal and Installation Tool

Axle Model Number	Dimension X (± 0.001-inch)	Dimension X (± 0.025 mm)	Dimension Y (± 0.001-inch)	Dimension Y (± 0.025 mm)
FC-901				
FC-903	1.22	31.191	1.350	34.290
FC-921				
FC-941	1.493	37.922	1.618	41.097
FD-901	1.427	36.245	1.552	39.420
FD-931	1.600	40.640	1.725	43.815
FD-933				
FD-961	1.786	45.364	1.911	48.539
FE-970	1.600	40.640	1.725	43.815
FF-921				
FF-931				
FF-932	1.787	45.389	1.911	
FF-933				
FF-934				48.539
FF-941				
FF-942				
FF-943				
FF-944	1.786	45.364	1.911	
FF-961				
FF-966				
FF-967				
FF-971	1.600	40.640	1.725	43.815
FF-981				
FF-982				
FF-983	1.786	45.364	1.911	48.539
FF-984				
FF-986				
FF-987				
FG-931	1.787	45.389		
FG-933			1.911	48.539
FG-941	1.786	45.364		
FG-943				

Axle Model Number	Dimension X (± 0.001-inch)	Dimension X (± 0.025 mm)	Dimension Y (± 0.001-inch)	Dimension Y (± 0.025 mm)
FL-931	1.922	50.596	2.116	53.746
FL-933				
FL-941	1.990	50.546		
FL-943				
FL-951	1.992	50.596		
FU-910	2.054	52.171	2.179	55.346
FU-935				
MFS 6	1.228	31.191	1.350	34.290
MFS 7	1.493	37.922	1.618	41.097
MFS 8				
MFS 10	1.786	45.364	1.911	48.539
MFS 12	1.786			
MFS 13				
MFS 14				
MFS 16	1.990	50.546	2.116	53.746
MFS 18				
MFS 20				

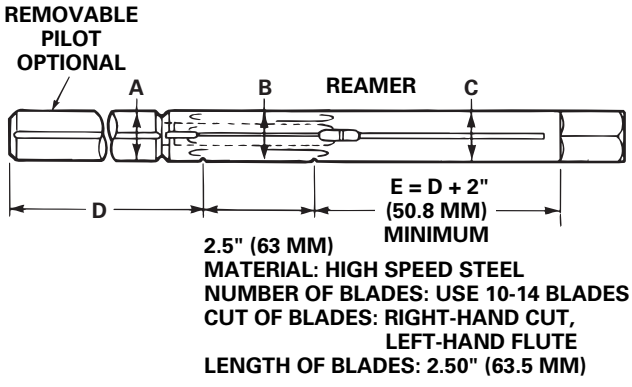

Figure 11.2

Table V: Bushing Reamer Dimensions

Axle Model	Lower Pilot Diameter Dimension A (± 0.001-inch or ± 0.0245 mm)		Blade Diameter Dimension B (± 0.0005-inch or ± 0.0127 mm)		Upper Pilot Diameter C (± 0.001-inch or ± 0.0245 mm)		Lower Pilot Length Dimension D		Upper Pilot Length Minimum Dimension E		SPX Service Kit
	inch	mm	inch	mm	inch	mm	inch	mm	inch	mm	
FC-901	1.2225	31.0515	1.2375	31.4325	1.2320	31.2928+	6.75	171.45	8.75	222.25	PT4370-110
FC-901*											
FC-903											
FC-921			1.2360								
FC-941	1.4875	37.7825	1.5015	38.1381	1.4960	37.9984	8.90	226.06	10.90	276.86	PT4370-120
FD-901	1.4220	36.1188	1.4370	36.4998	1.4315	36.3601	8.50	215.90	10.50	266.70	N/A
FD-901*				36.4498							
FD-931	1.5950	40.5130	1.6100	40.8940	1.6405	41.6687					N/A
FD-933											
FD-961	1.7800	45.2120	1.7955	45.6057	1.7900	45.4660	10.25	260.35	12.25	311.15	PT4370-10
FE-970	1.5950	40.5130	1.6100	40.8940	1.6405	41.6687	8.50	215.90	10.50	266.70	N/A
FF-921	1.7820	45.2628	1.7970	45.6438	1.7915	45.5041	9.30	236.22	11.20	287.02	PT4370-10
FF-931											
FF-932									11.30		
FF-933											
FF-934											
FF-941	1.7800	45.2120	1.7955	45.6057	1.7900	45.4660	10.25	260.35	12.25	311.15	PT4370-10
FF-942											
FF-943											
FF-944											
FF-961											
FF-966											
FF-967											
FF-971	1.5950	40.5130	1.6100	40.8940	1.6405	41.6687	8.50	215.90	10.50	266.70	N/A

Axle Model	Lower Pilot Diameter Dimension A (± 0.001-inch or ± 0.0245 mm)		Blade Diameter Dimension B (± 0.0005-inch or ± 0.0127 mm)		Upper Pilot Diameter C (± 0.001-inch or ± 0.0245 mm)		Lower Pilot Length Dimension D		Upper Pilot Length Minimum Dimension E		SPX Service Kit
	inch	mm	inch	mm	inch	mm	inch	mm	inch	mm	
FF-981	1.7800	45.2120	1.7955	45.6057	1.7900	45.4660	10.25	260.35	12.25	311.15	PT 4370-10
FF-982											
FF-983											
FF-984											
FF-986											
FF-987											
FG-931	1.7820	45.2628	1.7955	45.6057	1.7915	45.5041	9.30	236.22	11.30	287.02	PT 4370-10
FG-933											
FG-941	1.7800	45.2120	1.7955	45.6057	1.7900	45.4660	10.25	260.35	12.25	311.15	PT 4370-10
FG-943						45.4787					
FL-931	1.9870	50.4698	2.0005	50.8127	1.9970	50.7238	10.10	256.54	12.10	307.34	PT 4370-20
FL-933											
FL-941	1.9850	50.4190	2.0005	50.8127	1.9950	50.6730					
FL-943											
FL-951											
FU-910	2.0490	52.0446	2.0640	52.4256	2.0585	52.2859	11.32	287.52	13.32	338.32	N/A
FU-935											
MFS 6	1.2225	31.0515	1.2360	31.4325	1.2320	31.2928	6.75	171.45	8.75	222.25	PT 4370-110
MFS 7	1.4875	37.7825	1.5015	38.1381	1.4960	37.9984	8.90	226.06	10.90	276.86	PT 4370-120
MFS 8											
MFS 10	1.7800	45.2120	1.7955	45.6057	1.7900	45.4660	10.25	260.35	12.25	311.15	PT 4370-10
MFS 12											
MFS 13	1.7800	45.2120	1.7955	45.6057	1.7900	45.4660	10.25	260.35	12.25	311.15	PT 4370-10
MFS 14											
MFS 16	1.9850	50.4190	2.0005	50.8127	1.9950	50.6730	10.10	256.54	12.10	307.34	PT 4370-20
MFS 18											
MFS 20											

*Use these specifications when replacing the existing bushing with an Easy Steer™ bushing.

Meritor Heavy Vehicle Systems, LLC
2135 West Maple Road
Troy, MI 48084 USA
866-OnTrac1 (668-7221)
meritor.com

Copyright 2026
Meritor, Inc.

Printed in USA

Revised 02-26
Maintenance Manual 2 (16579)